SUSPENSION

02
SECTION

GENERAL PROCEDURES . . . 02-10
WHEEL ALIGNMENT. 02-11
WHEEL AND TIRES. 02-12
FRONT SUSPENSION. 02-13
REAR SUSPENSION 02-14
TECHNICAL DATA 02-50
SERVICE TOOLS 02-60

02–10 GENERAL PROCEDURES

GENERAL PROCEDURES (SUSPENSION) 02–10–1

GENERAL PROCEDURES (SUSPENSION)

DPE021000000W01

Wheel and Tire Installation

1. When installing the wheels and tires, tighten the wheel nuts in a criss-cross pattern to the following tightening torque.

   Tightening torque
   88.2—117.6 N·m {9.00—11.99 kgf·m, 65.06—86.73 ft·lbf}

Suspension Links Removal/Installation

1. For the joint sections with rubber bushings, raise the vehicle using a lift, and then temporarily tighten the installation bolts and nuts. Lower the vehicle to the ground and tighten them completely with the specified torque.

Connector Disconnection

1. Disconnect the negative battery cable before performing any work that requires handling of connectors. (See 01–17A–1 BATTERY REMOVAL/INSTALLATION [L8, LF].) (See 01–17B–1 BATTERY REMOVAL/INSTALLATION [MZR-CD (RF Turbo)].)

Brake Lines Disconnection

1. If any brake line has been disconnection during the procedures, add brake fluid, bleed the brake, and inspect for leakage after the procedure has been completed.

   Caution
   - **Brake fluid will damage painted surfaces. Be careful not to spill any on painted surfaces. If it is spilled, wipe it off immediately.**

Brake Pipe Flare Nut Tightening

1. Tighten the brake pipe flare nut using the **SST** (49 0259 770B) or any commercially available flare nut wrench.

EHPAS Related Parts

Warning
- **If the configuration procedure is not completed, the EHPAS will not operate properly and it might cause an unexpected accident. Therefore, when replacing or removing the electric power steering oil pump, make sure to perform the configuration procedure to ensure the proper EHPAS operation.**

1. Make sure that there are no DTCs in the EHPAS memory after working on EHPAS related parts. If there are any codes in the memory, clear them.
2. When replacing or removing the electric power steering oil pump, perform the configuration procedures. (See 06-14–27 ELECTRO HYDRAULIC POWER ASSIST STEERING (EHPAS) CONTROL MODULE CONFIGURATION.)

Power Steering Related Parts

1. If any power steering fluid line has been disconnected, perform the following after installation of the power steering components. (See 06-14–4 AIR BLEEDING.) (See 06-14–4 POWER STEERING FLUID INSPECTION.)

— Power steering fluid amount inspection
— Power steering fluid leakage inspection
— Air bleeding

Power steering fluid
ATF (M-III, or equivalent (e.g. Dexron®II))

02–11 WHEEL ALIGNMENT

WHEEL ALIGNMENT
PRE-INSPECTION 02–11–1
FRONT WHEEL ALIGNMENT 02–11–2
REAR WHEEL ALIGNMENT 02–11–3

WHEEL ALIGNMENT PRE-INSPECTION

DPE021100000W01

1. Park the vehicle on a level ground, in an unloaded condition*, and with the wheels straight forward.
   *: Unloaded condition.....Fuel tank is full. Engine coolant and engine oil are at specified level. Spare tire, jack and tools are in designated position.
2. Inspect the tire pressure.
   - Adjust to the recommended pressure if necessary. (See 02–50–1 SUSPENSION TECHNICAL DATA.)
3. Inspect the wheel bearing play.
   - Correct if necessary. (See 03–11–2 WHEEL HUB, STEERING KNUCKLE INSPECTION.) (See 03–12–2 WHEEL HUB COMPONENT INSPECTION.)
4. Inspect the wheel runout.
   - Correct if necessary. (See 02–50–1 SUSPENSION TECHNICAL DATA.)
5. Rock the vehicle, and verify that there is no looseness in the steering wheel joint and suspension ball joint.
6. Rock the vehicle, and verify that the shock absorber operates properly.
7. Measure height H from the center of the wheel to the fender brim.
8. Verify that the difference between the left and right dimension H is within the specification.
   - If it exceeds the specification, repeat the Step 2—7.

Standard
10 mm {0.39 in} or less

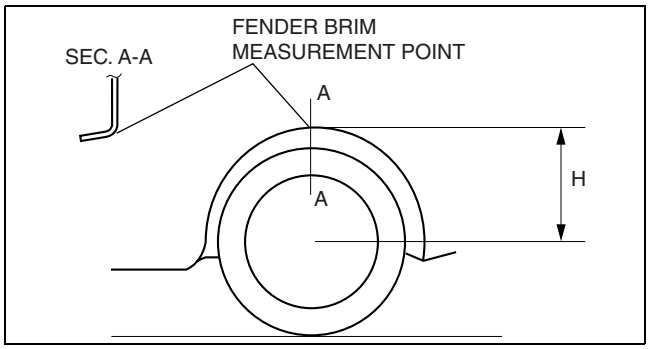

CHU0211W001

FRONT WHEEL ALIGNMENT

DPE021100000W02

Front wheel alignment (Unloaded)*1 [L8, LF engine]

Item			Fuel gauge indication				
			Empty	1/4	1/2	3/4	Full
Maximum steering angle [Tolerance ±3°]		Inner	40 °30′±3°				
		Outer	33 °48′±3°				
Total toe-in	Tire [Tolerance ±4 {±0.16}]	(mm {in})	2 {0.08}				
	Rim inner		1±3 {0.04±0.12}				
		(degree)	0°11′±0°22′				
Caster angle*2 (Reference value) [Tolerance ±1°]			3°08′	3°09′	3°11′	3°13′	3°14′
Camber angle*2 (Reference value) [Tolerance ±1°]			–0°41′			–0°42′	
Steering axis inclination (Reference value)			13°57′			13°59′	

Front wheel alignment (Unloaded)*1 [MZR-CD (RF Turbo) engine]

Item			Fuel gauge indication				
			Empty	1/4	1/2	3/4	Full
Maximum steering angle [Tolerance ±3°]		Inner	40 °30′±3°				
		Outer	33 °48′±3°				
Total toe-in	Tire [Tolerance ±4 {±0.16}]	(mm {in})	2 {0.08}				
	Rim inner		1±3 {0.04±0.12}				
		(degree)	0°11′±0°22′				
Caster angle*2 (Reference value) [Tolerance ±1°]			3°05′	3°07′	3°08′	3°10′	3°12′
Camber angle*2 (Reference value) [Tolerance ±1°]			–0°42′	–0°43′			–0°44′
Steering axis inclination (Reference value)			14°01′	14°02′			14°04

*1 : Engine coolant and engine oil are at specified level. Spare tire, jack and tools are in designated position.
*2 : Difference between left and right must not exceed **1°30′** .

Note
Total toe-in measuring position
- Tire: A indicated in the figure (between the center of the tires)
- Rim inner: B indicated in the figure (between the inner side of the rims)

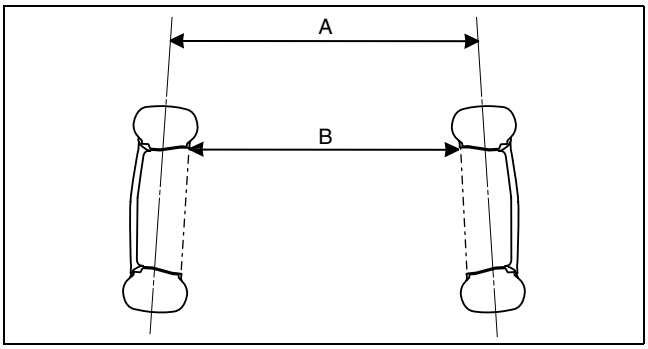

C3U0211W002

Steering Angle Adjustment
1. Loosen the locknut of the tie-rod end.
2. Remove the rack boot clamp.
3. Rotate the tie rod and adjust the steering angle.

Note
- The travel distance of the right and left tie rods should be the same.

4. Rotate the tie rod and adjust so that the length L shown in the figure is within the specification.

   Dimension L(referrence value)
   13—31 mm {0.52—1.22 in}

   Difference between left and right
   3 mm {0.12 in} or less

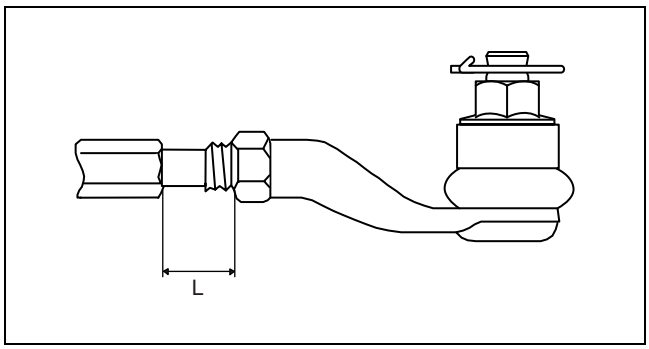

DOE211ZW1001

5. Tighten the locknut of the tie-rod end.

   Tightening torque
   78.6—108.0 N·m {8.1—11.0 kgf·m, 58.0—79.6 ft·lbf}

6. Correct the rack boot twists.
7. Install and fix the rack boot clamp.
8. After adjusting the steering angle, always inspect and adjust the toe angle.

Total Toe-in Adjustment

1. Loosen the locknut of the tie-rod end.
2. Remove the rack boot clamp.
3. Adjust the total toe-in by rotating each tie rod (left and right) in the opposite directions by the same amount respectively.

   Note
   - Toe angle changes by **approx. 6 mm {0.2 in}** per one rotation of the tie rod for one wheel.
   - Each tie rod has a right-hand thread. When increasing the toe-in angle, rotate the right tie rod toward the front of the vehicle and rotate the left tie rod toward the rear of the vehicle by the same amount.

4. Tighten the locknut of the tie-rod end.

   Tightening torque
   78.6—108.0 N·m {8.1—11.0 kgf·m, 58.0—79.6 ft·lbf}

5. Verify that the rack boot does not have any twisting and install the rack boot clamp.

REAR WHEEL ALIGNMENT

DPE021100000W03

Rear wheel alignment (Unloade)*1 [L8, LF engine]

Item			Fuel gauge indication				
			Empty	1/4	1/2	3/4	Full
Total toe-in	Tire [Tolerance ±4 {±0.16}]	(mm {in})	2 {0.08}				
	Rim inner		1±3 {0.04±0.12}				
		(degree)	0°11′±0°22′				
Camber angle*2 (Reference value) [Tolerance ±1°]			−1°22′	−1°24′	−1°26′	−1°27′	−1°29′
Thrust angle (Reference value) [Tolerance ±0°48′]			0°				

Rear wheel alignment (Unloaded)*1 [MZR-CD (RF Turbo) engine]

Item			Fuel gauge indication				
			Empty	1/4	1/2	3/4	Full
Total toe-in	Tire [Tolerance ±4 {±0.16}]	(mm {in})	2 {0.08}				
	Rim inner		1±3 {0.04±0.12}				
		(degree)	0°11′±0°22′				
Camber angle*2 (Reference value) [Tolerance ±1°]			−1°21′	−1°24′	−1°25′	−1°27′	−1°29′
Thrust angle (Reference value) [Tolerance ±0°48′]			0°				

*1 : Engine coolant and engine oil are at specified level. Spare tire, jack and tools are in designated position.
*2 : Difference between left and right must not exceed **1°30′** .

Note
Total toe-in measuring position
- Tire: A indicated in the figure (between the center of the tires)
- Rim inner: B indicated in the figure (between the inner side of the rims)

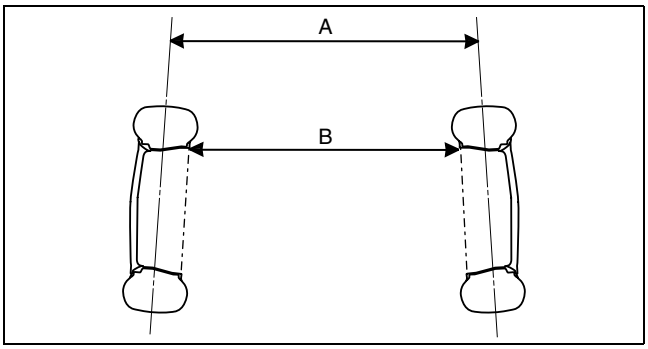

C3U0211W002

Total Toe-in Adjustment
1. Loosen the installation nut of the adjusting cam bolt.
2. Rotate the adjusting cam bolt in either direction to adjust the camber.

	Left wheel	Right wheel
Toe-out direction	Counterclockwise	Clockwise
Toe-in direction	Clockwise	Counterclockwise

3. Tighten the nut.

   Tightening torque
   80.0—100.0 N·m {8.16—10.19 kgf·m, 59.01—73.75 ft·lbf}

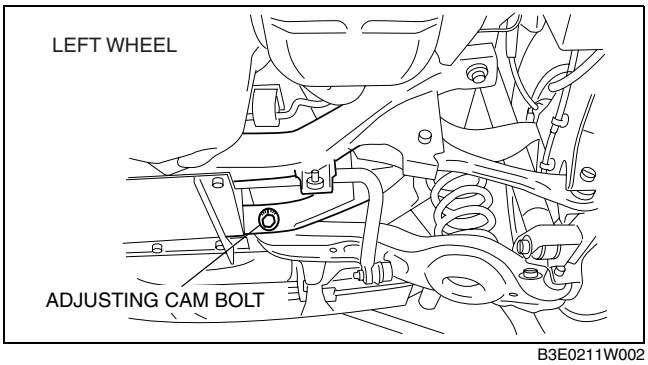

B3E0211W002

02–12 WHEEL AND TIRES

WHEEL AND TIRE SPECIFICATION . . . 02–12–1
WHEEL BALANCE ADJUSTMENT (ALUMINUM ALLOY WHEEL) 02–12–1

WHEEL AND TIRE SPECIFICATION

DPE021200000W02

Wheel and tires

Item				Specification			
Standard tire and wheel							
Wheel	Size			15 × 6J		16 × 6 1/2J	17 × 6 1/2J
	Offset (mm {in})			52.5 {2.07}			
	Pitch circle diameter (mm {in})			114.3 {4.50}			
	Material			Steel	Aluminum alloy	Aluminum alloy	
Tire	Size			195/65R15 91V		205/55R16 91V	205/50R17 93V
	Air pressure (kPa {kgf/cm^2, psi})	Front	Up to 3 persons	220 {2.2, 32}			MZR-CD (RF Turbo): 230 {2.3, 33} Except for above: 220 {2.2, 32}
			Full load	240 {2.4, 35}			
		Rear	Up to 3 persons	220 {2.2, 32}			MZR-CD (RF Turbo): 230 {2.3, 33} Except for above: 220 {2.2, 32}
			Full load	280 {2.8, 41}			
	Remaining tread (mm {in})			1.6 {0.06}			
Wheel and tire	Lug nut tightening torque (N·m {kgf·m, ft·lbf})			88.2—117.6 {9.0—12.0, 65.0—87.0}			
	Wheel and tire runout (mm {in})		Radial direction	1.5 {0.06} max.			
			Lateral direction	2.5 {0.10} max.	2.0 {0.08} max.		
	Wheel imbalance (g {oz})			Knock-type*2: 9 {0.32} max.	Adhesive-type*1: 14 {0.49} max. Knock-type*2: 9 {0.32} max.	Adhesive-type*1: 13 {0.46} max. Knock-type*2: 8 {0.28} max.	Adhesive-type*1: 11 {0.38} max. Knock-type*2: 7 {0.25} max.

*1 : Total weight exceeds **160 g {5.65 oz}** .
*2 : One balance weight: **60 g {2.12 oz}** max. If the total weight exceeds **100 g {3.53 oz}** on one side, rebalance after moving the tire around on the rim. Do not use three or more balance weights.

WHEEL BALANCE ADJUSTMENT (ALUMINUM ALLOY WHEEL)

DPE021200000W01

Caution
- **Adjust the outer wheel balance first, then the inner wheel balance.**
- **Be careful not to scratch the wheels.**

Adhesive-type Balance Weight (Outer)

1. Remove the old balance weight from the wheel.
2. Remove the double-sided adhesive tape remaining on the wheel, then clean and degrease the bonding area.
3. Set the wheel on a wheel balancer, measure the amount of unbalance and the position with the mode set for knock-type balance weight.
4. Multiply the amount of unbalance by **1.6** to obtain the balance weight value.
5. Select a balance weight closest to the weight value and attach the balance weight on the position (outer) indicated by the wheel balancer.

Example calculation of balance weight value
Indicated amount of unbalance: 23 g {0.81 oz}
23 g {0.81 oz}×1.6 = 36.8 g {1.30 oz}
Selected balance weight value: 35 g {1.24 oz}

Note
- When selecting a balance weight, select one closest to the calculated value.
  Example: **32.4 g {1.14 oz} = 30 g {1.06 oz}**

Caution
- **Use a genuine balance weight or equivalent (steel).**
- **When attaching the weight, press the weight with a force of 25 N {2.5 kgf, 5.5 lbf} per 5 g {0.2 oz} for 2 s or more.**

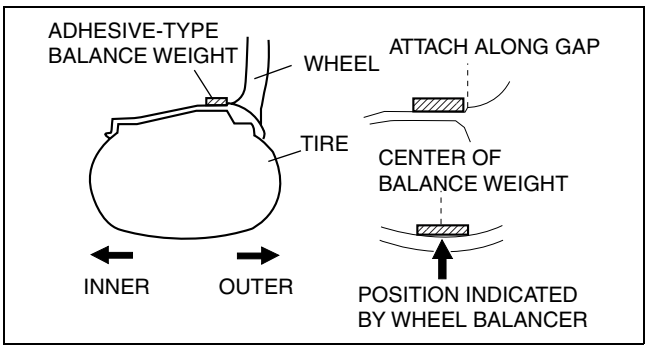

CHU0212W108

6. If attaching tow balance weights, position them so that each is on either side of the position indicated by the wheel balancer.

Caution
- **Do not attach weight balances in a row.**
- **Do not overlap the balance weights.**
- **Total weight must not exceed 160g {5.65 oz}.**

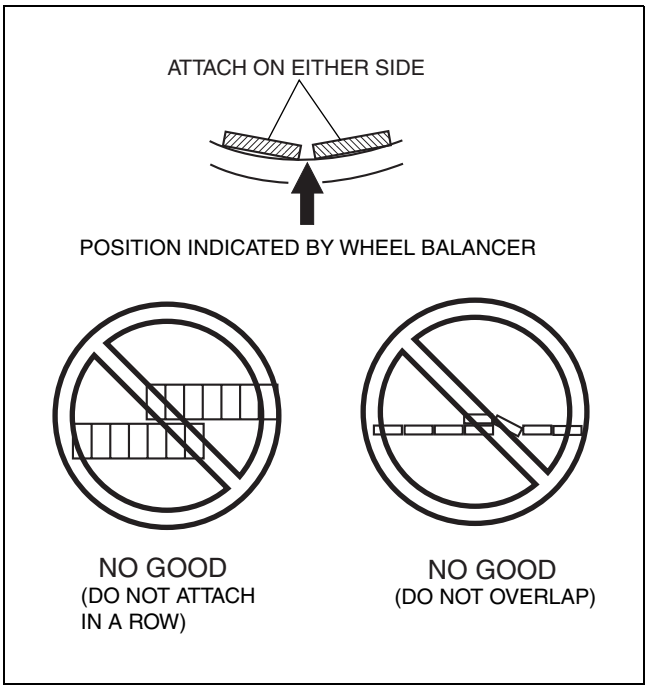

CHU0212W109

Knock-type Balance Weight (Inner)
1. Measure the amount of unbalance with a wheel balancer.
2. Attach a weight corresponding to the measured weight value on the position (inner) indicated by the wheel balancer.

Caution
- **Do not attach three or more balance weights.**
- **One balance weight must not exceed 60g {2.12 oz}, and a total of tow balance weights must not exceed 100g {3.53 oz}.**

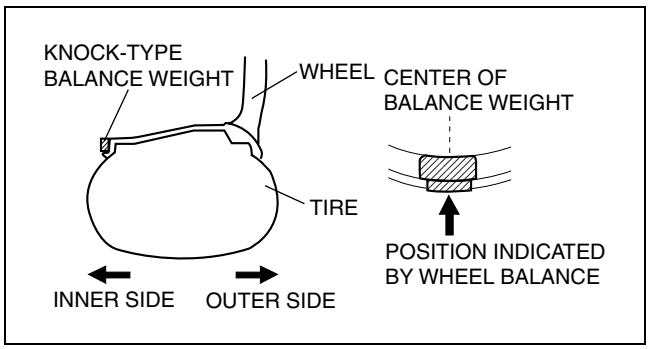

CHU0212W107

Remaining Amount of Unbalance Confirmation
1. After installing the outer and inner balance weights, operate the wheel balancer again.
2. Confirm that the remaining unbalance does not exceed the following on either side.
   - If the remaining unbalance exceeds the specifications, adjust the wheel balance again.

Specifications

	Outer (Adhesive-type)	Inner (Knock-type)
15 inch wheel	14 g {0.49 oz}	9 g {0.32 oz}
16 inch wheel	13 g {0.46 oz}	8 g {0.28 oz}
17 inch wheel	11 g {0.38 oz}	7 g {0.25 oz}

02–13 FRONT SUSPENSION

FRONT SUSPENSION LOCATION INDEX 02–13–1
FRONT SHOCK ABSORBER AND COIL SPRING REMOVAL/INSTALLATION. 02–13–2
FRONT SHOCK ABSORBER INSPECTION 02–13–6
FRONT SHOCK ABSORBER DISPOSAL. 02–13–6
FRONT LOWER ARM REMOVAL/ INSTALLATION. 02–13–7
FRONT LOWER ARM INSPECTION 02–13–8
FRONT STABILIZER REMOVAL/ INSTALLATION. 02–13–8
FRONT STABILIZER CONTROL LINK INSPECTION 02–13–11
FRONT CROSSMEMBER REMOVAL/ INSTALLATION. 02–13–11

FRONT SUSPENSION LOCATION INDEX

DPE021300000W01

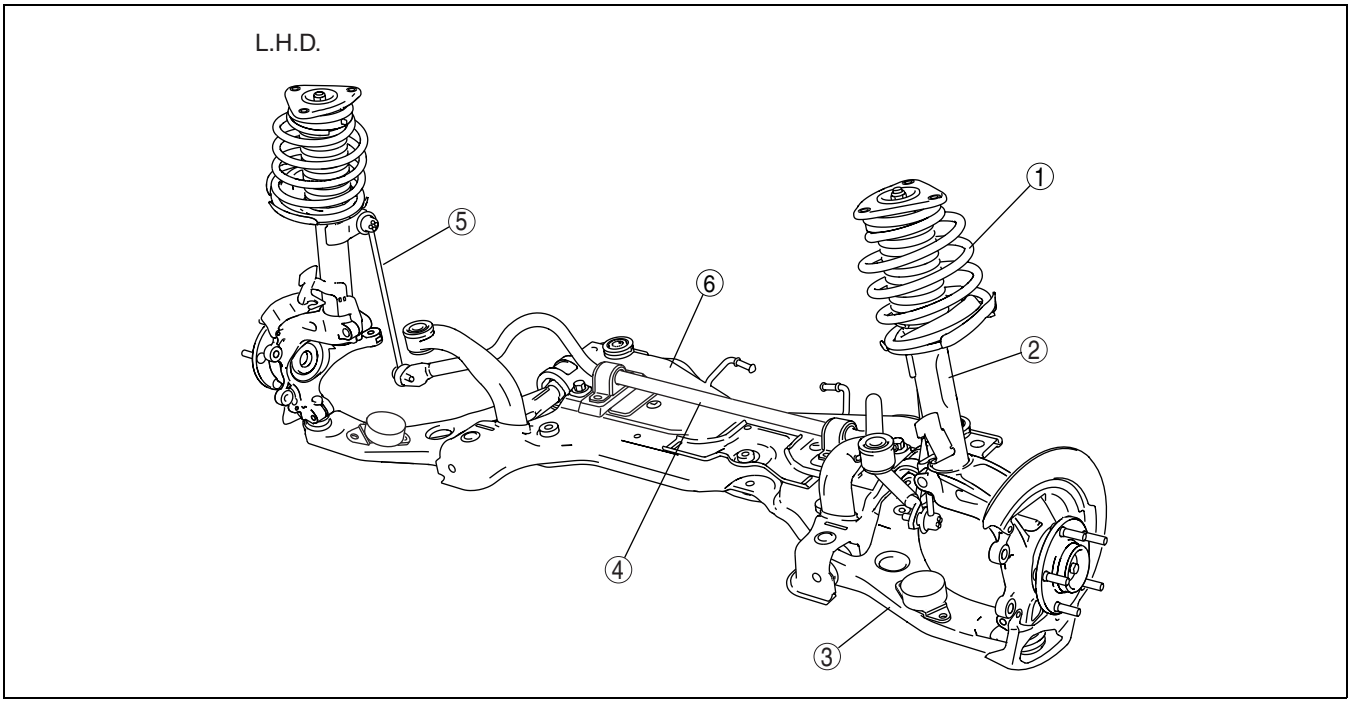

DPE213ZW1001

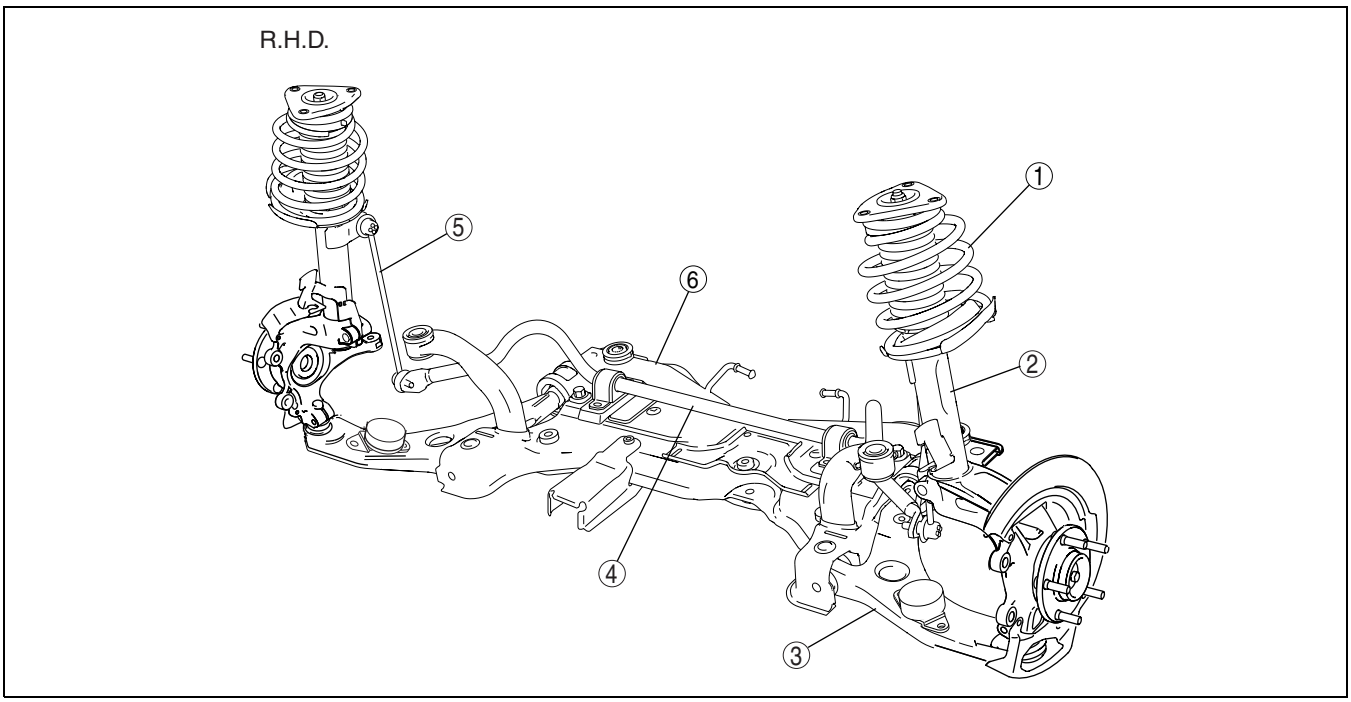

DPE213ZW1002

1	Front shock absorber and coil spring (See 02–13–2 FRONT SHOCK ABSORBER AND COIL SPRING REMOVAL/INSTALLATION.)
2	Front shock absorber (See 02–13–6 FRONT SHOCK ABSORBER INSPECTION.) (See 02–13–6 FRONT SHOCK ABSORBER DISPOSAL.)
3	Front lower arm (See 02–13–7 FRONT LOWER ARM REMOVAL/ INSTALLATION.) (See 02–13–8 FRONT LOWER ARM INSPECTION.)
4	Front stabilizer (See 02–13–8 FRONT STABILIZER REMOVAL/ INSTALLATION.)
5	Stabilizer control link (See 02–13–11 FRONT STABILIZER CONTROL LINK INSPECTION.)
6	Front crossmember (See 02–13–11 FRONT CROSSMEMBER REMOVAL/INSTALLATION.)

FRONT SHOCK ABSORBER AND COIL SPRING REMOVAL/INSTALLATION

DPE021304910W01

Caution

- **Performing the following procedures without first removing the ABS wheel-speed sensor may possibly cause an open circuit in the wiring harness if it is pulled by mistake. Before performing the following procedures, disconnect the ABS wheel-speed sensor wiring harness connector (axle side) and fix the wiring harness to an appropriate place where it will not be pulled by mistake while servicing the vehicle.**

1. Remove in the order indicated in the table.
2. Install in the reverse order of removal.
3. Inspect the total toe-in and adjust it if necessary. (See 02–11–2 FRONT WHEEL ALIGNMENT.)

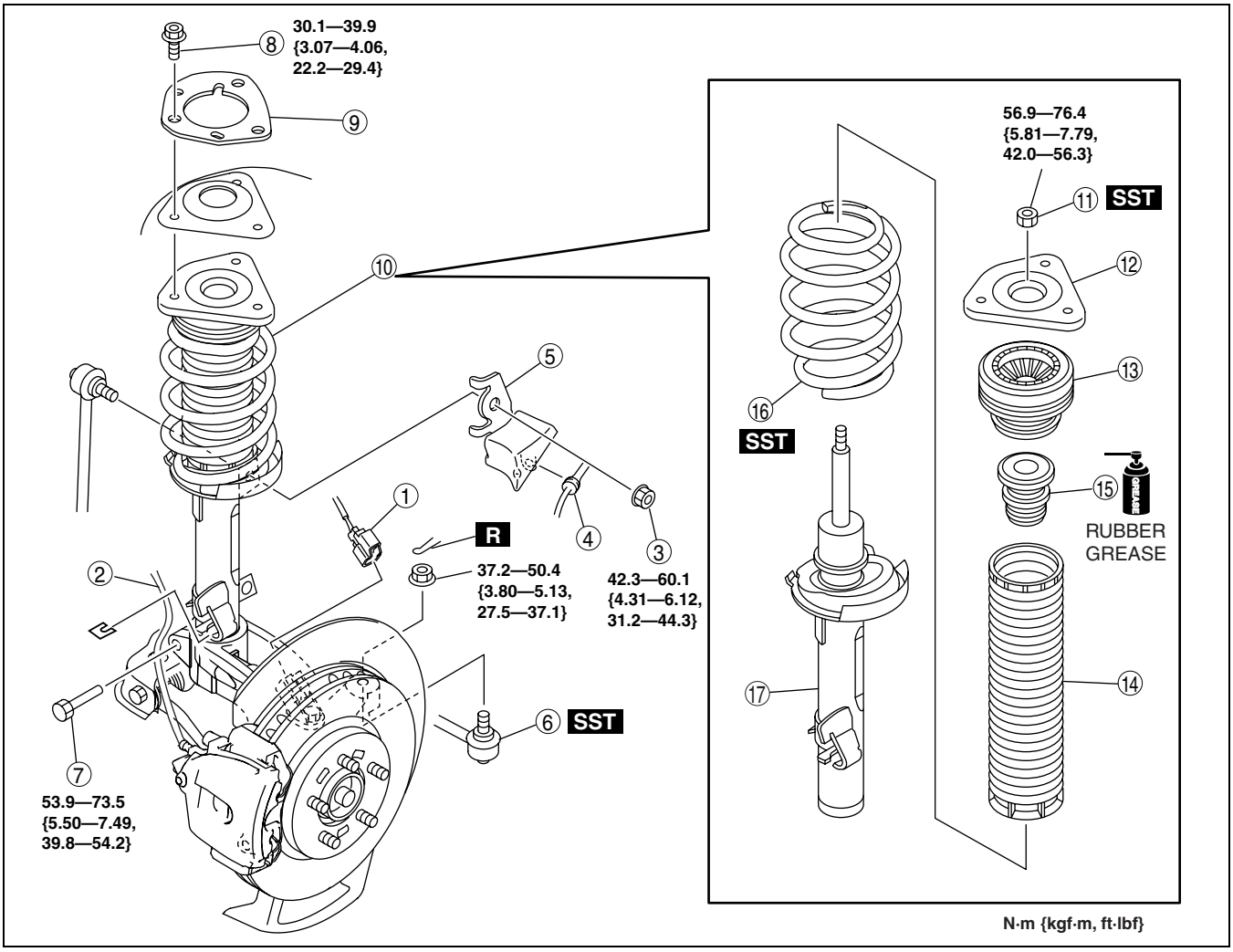

DPE213ZW1003

1	ABS wheel-speed sensor wiring harness connector
2	Brake hose
3	Stabilizer control link upper nut
4	ABS wheel-speed sensor wiring harness
5	Dynamic damper
6	Tie-rod end ball joint (See 02–13–11 FRONT CROSSMEMBER REMOVAL/INSTALLATION.)
7	Shock absorber lower bolt
8	Shock absorber upper bolt
9	Stiffener (See 02–13–6 Stiffener Installation Note.)

10	Shock absorber and coil spring (See 02–13–3 Shock Absorber and Coil Spring Removal Note.) (See 02–13–5 Shock Absorber and Coil Spring Installation Note.)
11	Piston rod nut (See 02–13–4 Piston Rod Nut Removal Note.)
12	Mounting rubber
13	Bearing (See 02–13–5 Bearing Installation Note.)
14	Dust boot (See 02–13–4 Dust Boot Installation Note.)
15	Bound stopper
16	Coil spring (See 02–13–4 Coil Spring Installation Note.)
17	Front shock absorber

Shock Absorber and Coil Spring Removal Note

1. Loosen the front lower arm inner bolt.

2. Separate the shock absorber from the wheel hub, steering knuckle component by tapping the upper part of the steering knuckle with a hammer.

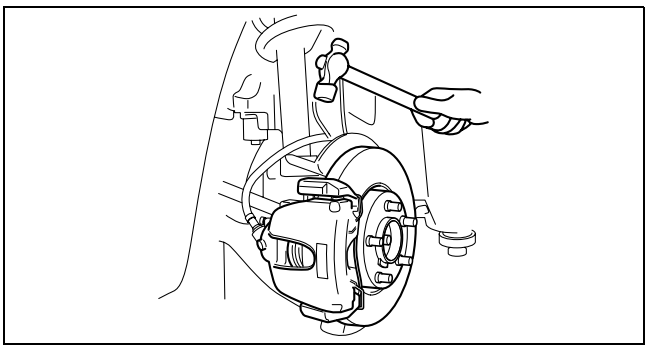

B3E0213W010

Piston Rod Nut Removal Note

Warning

- **Before removing the piston rod nut, secure the shock absorber and coil spring in the SSTs. Otherwise, the coil spring could fly off under tremendous pressure and cause serious injury or death, or damage to vehicle parts.**

1. Install to the **SSTs** using a piece of cloth in order to prevent the coil spring from being scratched.
2. Compress the coil spring using the **SSTs** and remove the piston rod nut.

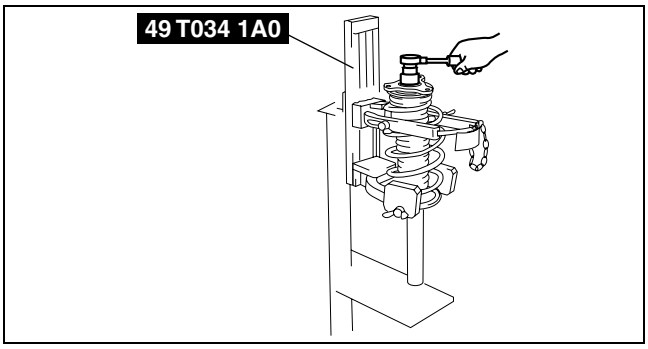

B3E0213W002

Coil Spring Installation Note

1. Compress the coil spring using the **SSTs**.
2. Install the shock absorber so that the lower end of the coil spring is seated on the step of the lower spring seat.

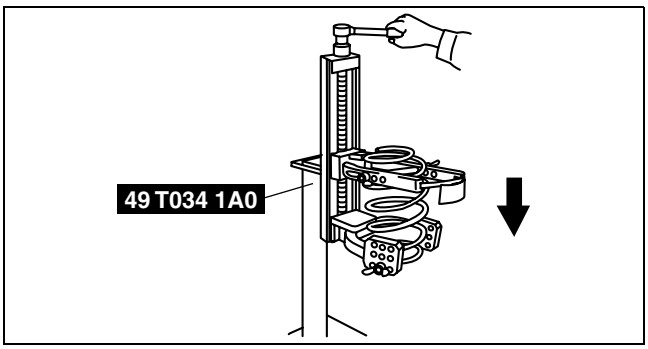

B3E0213W024

Dust Boot Installation Note

1. Install the dust boot by hooking the bottom edge over the shock absorber lip.

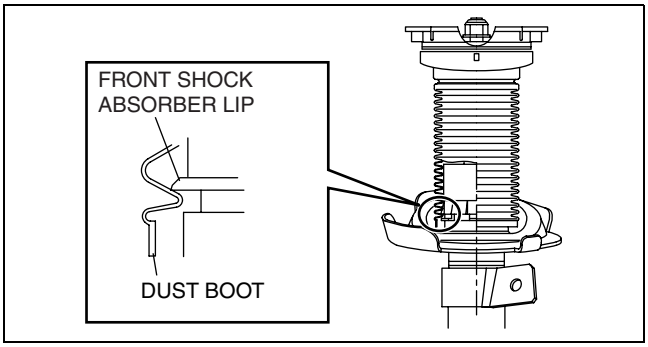

C3U0213W005

Bearing Installation Note

1. Install the bearing by hooking the upper end of the dust boot to the bearing lip.

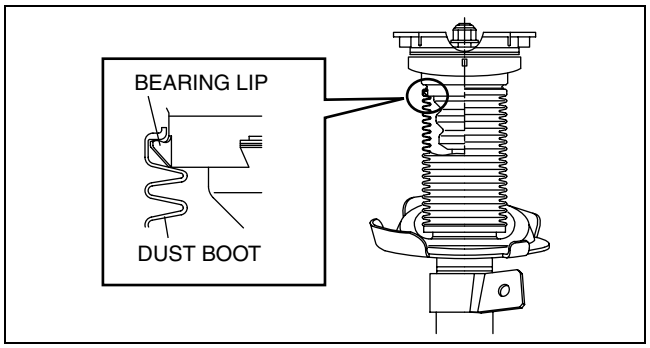

B3E0213W004

2. Align projection A on the lower part of the shock absorber with the bearing projection B.

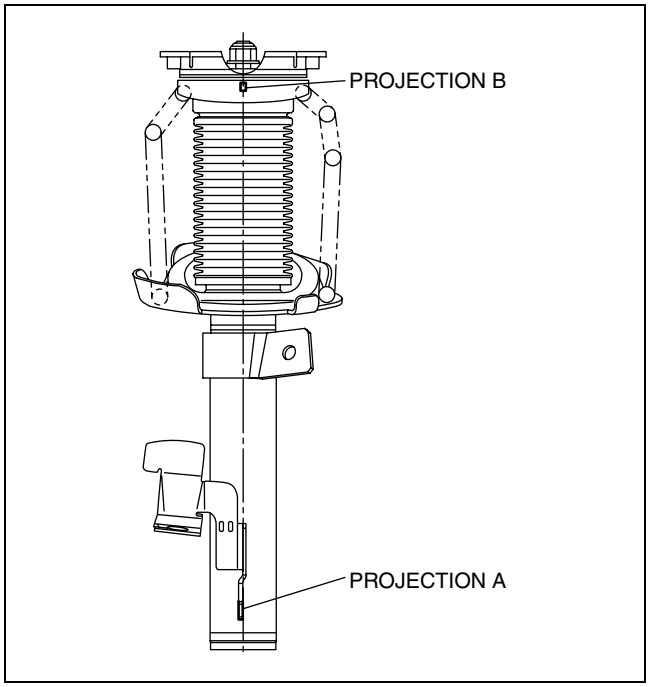

DPE213ZW1004

Shock Absorber and Coil Spring Installation Note

1. Install the shock absorber and coil spring so that the positioning projection on the mounting rubber is aligned with the positioning hole on the body.
2. Align the knuckle notch with projection A on the lower side of the shock absorber.

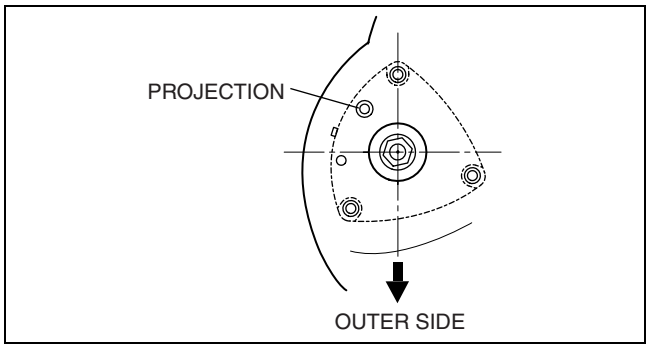

DPE213ZW1005

3. Raise the front lower arm using a jack and install the shock absorber and coil spring.

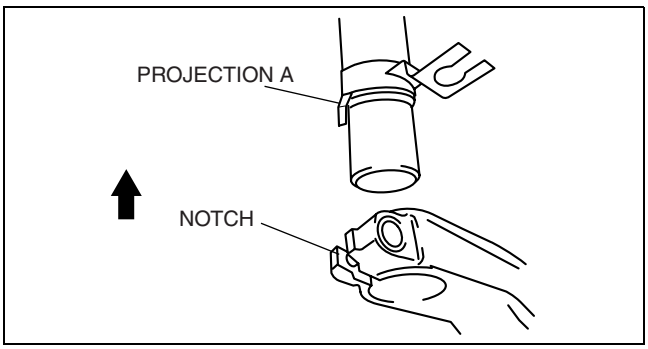

C3U0213W007

Stiffener Installation Note

1. Install the stiffener so that the mark (RH or LH) faces upward.

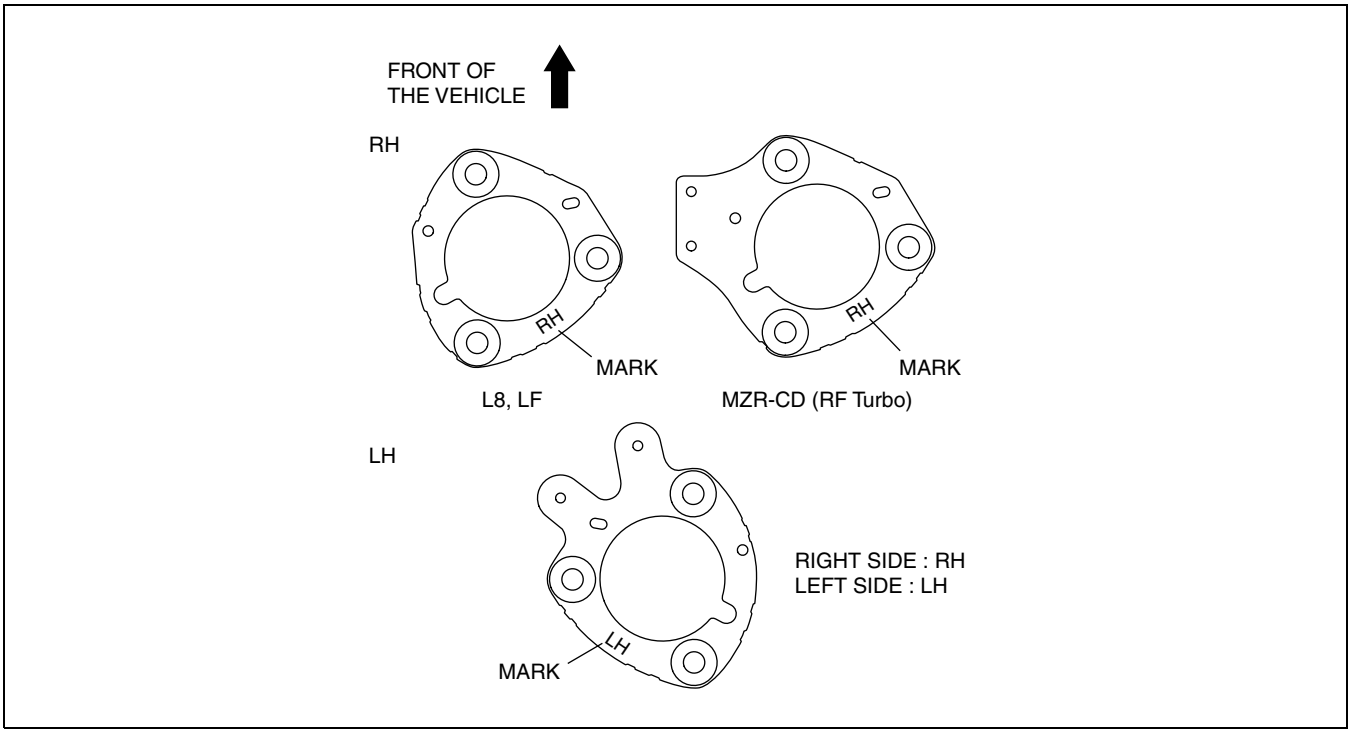

DPE213ZW1011

FRONT SHOCK ABSORBER INSPECTION

DPE021334700W01

1. Remove the front shock absorber.
2. Inspect for damage and oil leakage.
3. Compress and extend the shock absorber piston rod **at least three times** at a steady rate. **From the fourth** compression stroke, verify that the operational force does not change and that there is no unusual noise.
   - If there is any malfunction, replace the shock absorber.

FRONT SHOCK ABSORBER DISPOSAL

DPE021334700W02

1. Place the shock absorber on a level surface or with the piston pointing downwards.

2. Drill a **2—3 mm {0.08—0.11 in}** hole at the point A shown in the figure so that the gas can escape.

   Warning
   - **Whenever drilling into a shock absorber, wear protective eye wear. The gas in the shock absorber is pressurized and could spray metal chips into the eyes and face.**

3. Drill a **2—3 mm {0.08—0.11 in}** hole at the point B shown in the figure to drain the oil.
4. Turn the hole made in Step 3 downwards and drain the oil by pumping the piston rod up and down several times.
5. Cut off the end of the shock absorber.
6. Dispose of waste oil according to local waste disposal laws.

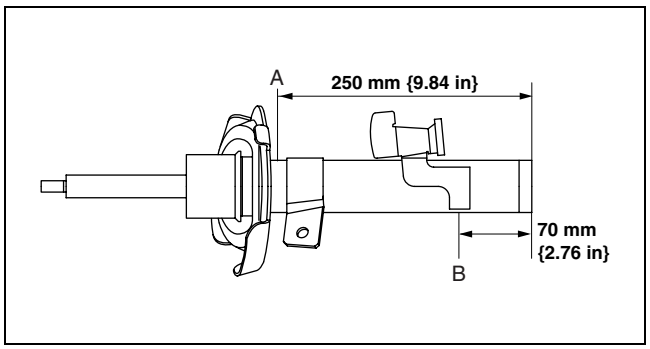

B3E0213W008

FRONT LOWER ARM REMOVAL/INSTALLATION

DPE021334310W01

1. Remove in the order indicated in the table.
2. Install in the reverse order of removal.
3. Inspect the wheel alignment and adjust it if necessary. (See 02–11–2 FRONT WHEEL ALIGNMENT.)

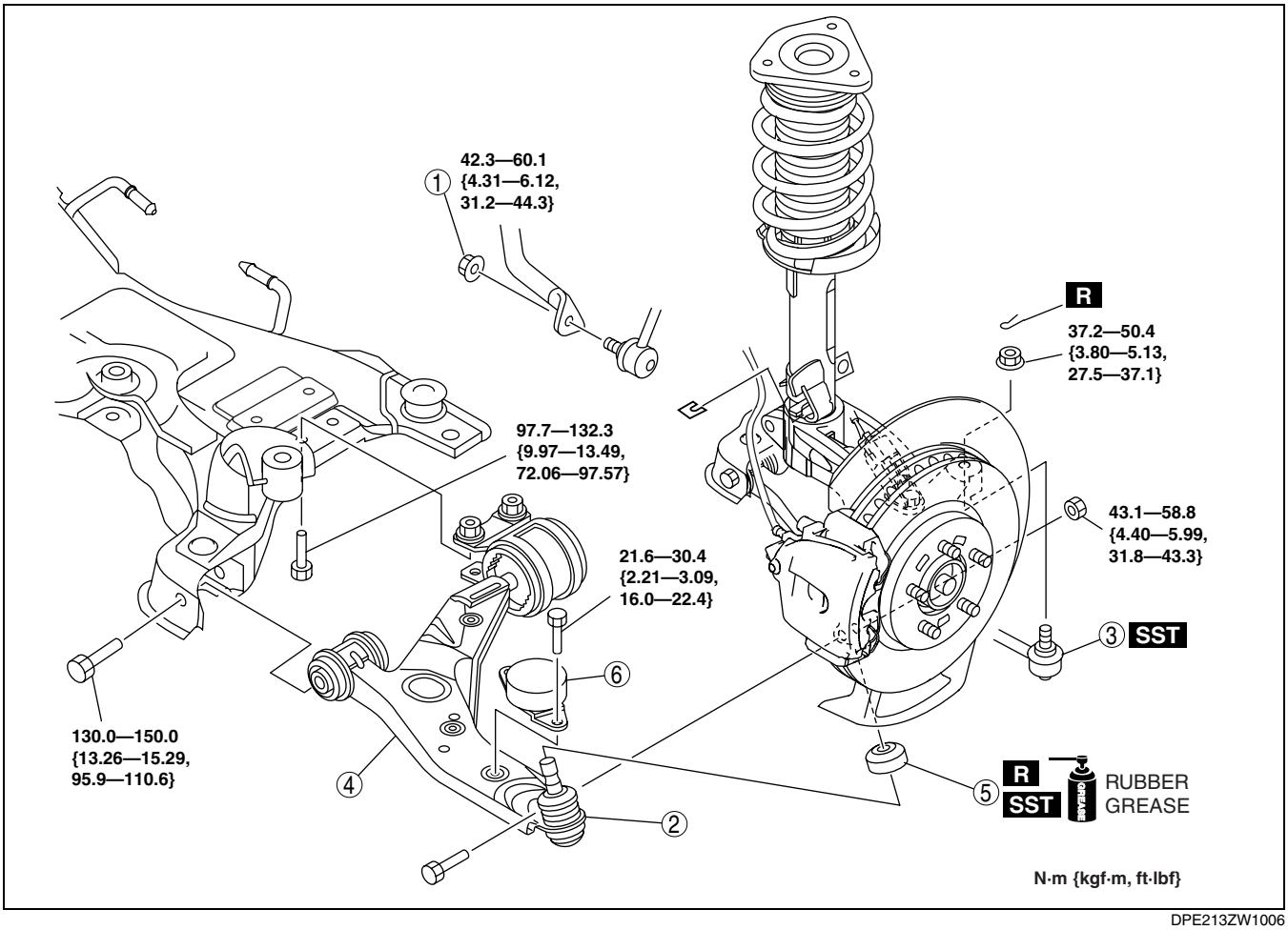

DPE213ZW1006

1	Stabilizer control link lower nut
2	Front lower arm ball joint
3	Tie-rod end ball joint (See 02–13–11 FRONT CROSSMEMBER REMOVAL/INSTALLATION.)

4	Front lower arm (See 02–13–8 Front Lower Arm Removal Note.) (See 02–13–8 Front Lower Arm Installation Note.)
5	Dust boot (See 02–13–8 Dust Boot Installation Note.)
6	Dynamic damper

Front Lower Arm Removal Note

Note
- When working on the right side of LF engine vehicles, move the engine and transaxle slightly towards the front side of the vehicle so that the engine does not interfere with the removal of the lower arm rear side bolt.

1. Remove the No.1 engine mount center bolt. (LF engine vehicles)
2. Move the engine and transaxle slightly towards the front side of the vehicle. (LF engine vehicles)
3. Remove the front lower arm rear side bolt.
4. Remove the front lower arm.

Dust Boot Installation Note
1. Wipe the grease off the ball stud.
2. Fill the inside of the new dust boot with grease.
3. Press the boot onto the ball joint using the **SST**.
4. Wipe away the excess grease.

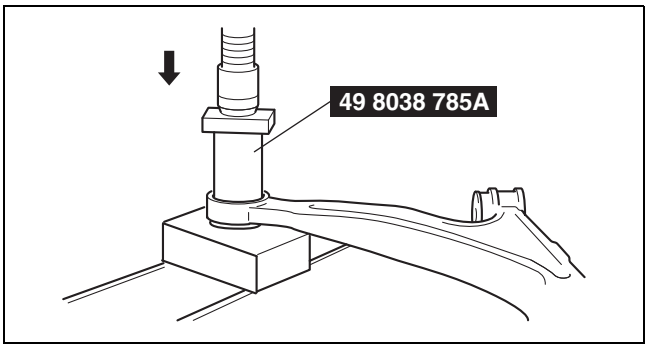

B3E0213W026

Front Lower Arm Installation Note

Caution
- **Install the front lower arm according to the following procedures for optimal installation. Tighten the lower arm installation bolt properly when the vehicle is lifted.**

1. Temporarily install the front lower arm.
2. Install the No.1 engine mount. (LF engine vehicles)

Tightening torque
93.1—116.6 N·m {9.50—11.88 kgf·m, 68.67—85.99 ft·lbf}

3. Tighten the front lower arm rear side bolt.
4. Tighten the front lower arm front side bolt.
5. Tighten the nut (front lower arm ball joint).

FRONT LOWER ARM INSPECTION

DPE021334310W02

1. Remove the lower arm from the vehicle.
2. Inspect the arm for bending or damage, and the ball joint for excessive looseness.
   - If there is any malfunction, replace the lower arm.
3. Rotate the ball joint stud **5 times**. Install the **SST** to the ball joint stud, measure the rotational torque using a pull scale.
   - If not within the specification, replace the lower arm.

Front lower arm rotational torque
1.0—4.9 N·m {11—49 kgf·cm, 9—43 in·lbf}
Pull scale reading [10—49 N {1.1—4.9 kgf, 3—10 lbf}]

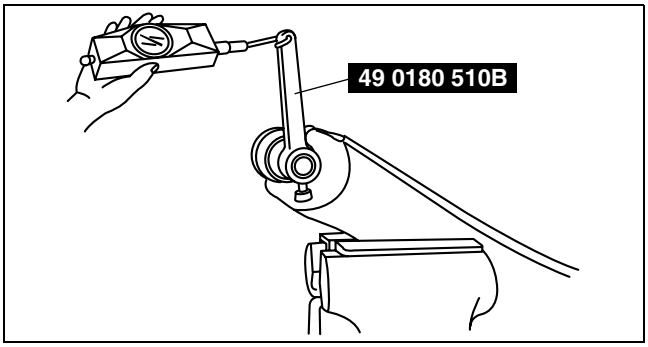

B3E0213W027

FRONT STABILIZER REMOVAL/INSTALLATION

DPE021334100W01

1. Detach the steering shaft. (See 06-14–7 STEERING WHEEL AND COLUMN REMOVAL/INSTALLATION.)

2. Remove in the order indicated in the table.
3. Install in the reverse order of removal.
4. Inspect the wheel alignment and adjust it if necessary. (See 02–11–2 FRONT WHEEL ALIGNMENT.)

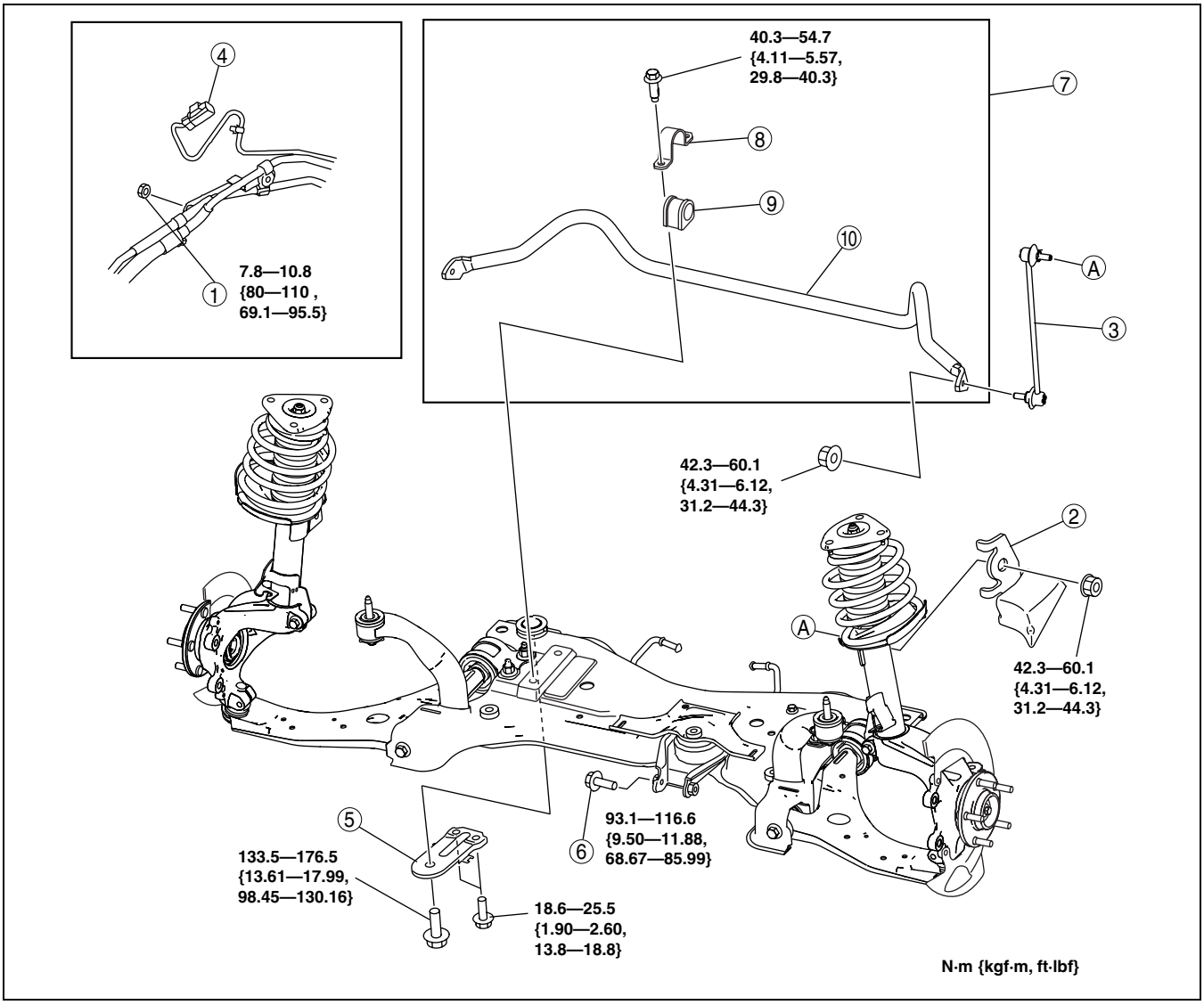

DPE213ZW1007

1	Power steering pipe nut
2	Dynamic damper
3	Stabilizer control link
4	Connector (for vehicles with EHPAS)
5	Front crossmember bracket (See 02–13–10 Front Crossmember Bracket Removal Note.)
6	No.1 engine mount center bolt

7	Front stabilizer component (See 02–13–10 Front Stabilizer Component Removal Note.) (See 02–13–10 Front Stabilizer Component Installation Note.)
8	Stabilizer bracket (See 02–13–10 Stabilizer Bracket Installation Note.)
9	Stabilizer bushing
10	Front stabilizer

Front Crossmember Bracket Removal Note

1. Support the front crossmember using a jack.
2. Remove the front crossmember brackets.

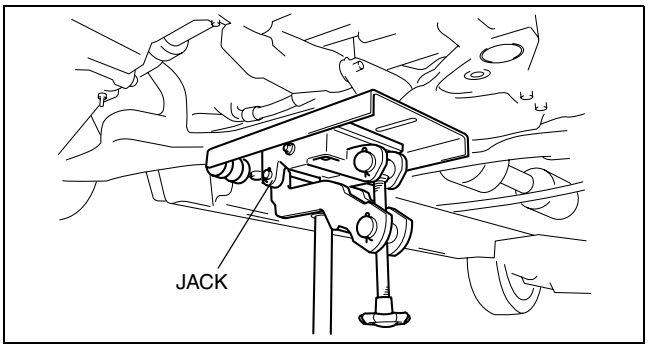

B3E0213W013

Front Stabilizer Component Removal Note

1. Detach the silencer hangers on the middle pipe from the front crossmember.
2. Lower the front crossmember slowly **approx. 90 mm {3.5 in}** and remove the front stabilizer component.

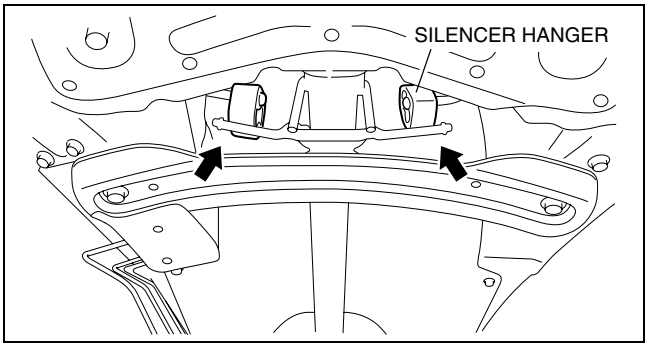

B3E0213W014

Stabilizer Bracket Installation Note

1. Verify the installation direction of the stabilizer bracket (the arrow should point to the front) by placing the stabilizer bar so that the identification mark faces the left side of the vehicle.
2. Install the stabilizer bushings and brackets so that they contact the stabilizer stoppers.

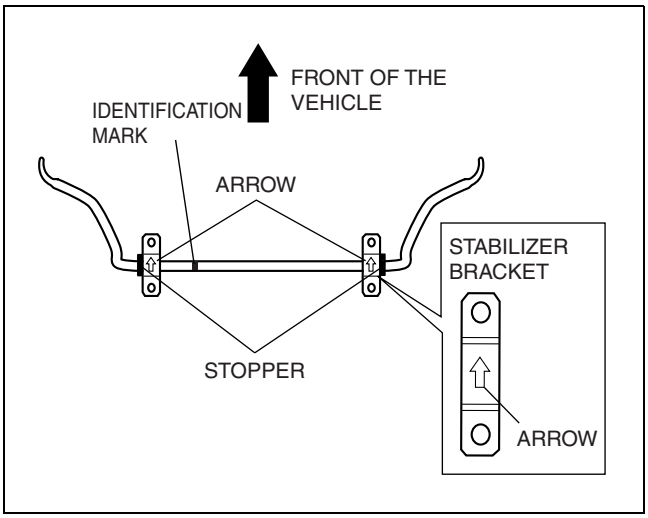

DPE213ZW1008

Front Stabilizer Component Installation Note

1. With the arrow on the stabilizer bracket facing the vehicle front, tighten the bolts in the order shown in the figure.

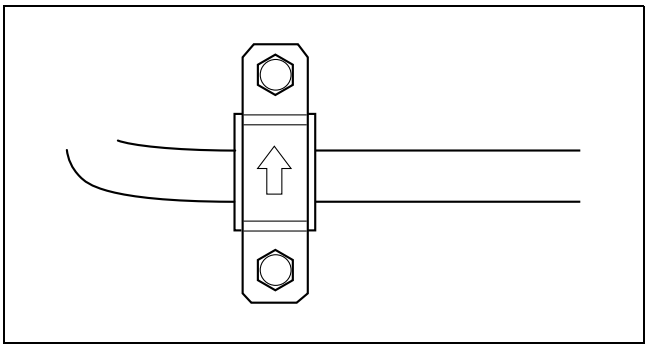

DPE213ZW1009

FRONT STABILIZER CONTROL LINK INSPECTION

DPE021334150W01

1. Remove the stabilizer control link from the vehicle.
2. Inspect for bending or damage. If there is any malfunction, replace the stabilizer control link.
3. Rotate the ball joint stud **10 times** and shake it side to side **10 times**.
4. Measure the ball-joint rotational torque using an Allen wrench and a torque wrench.

   Front stabilizer control link ball joint rotational torque
   0.2—0.9 N·m {3—9 kgf·cm, 2—7 in·lbf}

   - If not within the specification, replace the stabilizer control link.

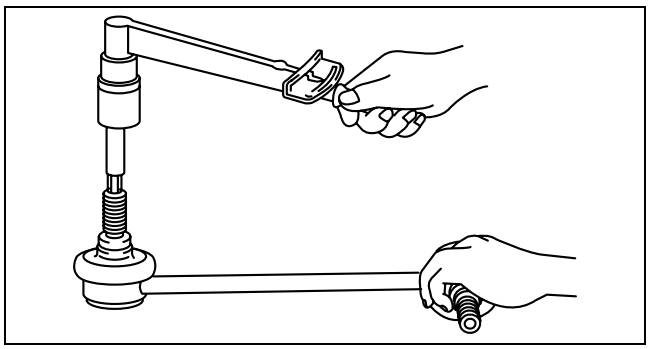

ADJ7414W015

FRONT CROSSMEMBER REMOVAL/INSTALLATION

DPE021334800W02

Caution

- **Performing the following procedures without first removing the ABS wheel-speed sensor may possibly cause an open circuit in the wiring harness if it is pulled by mistake. Before performing the following procedures, disconnect the ABS wheel-speed sensor wiring harness connector (axle side) and fix the wiring harness to an appropriate place where it will not be pulled by mistake while servicing the vehicle.**

1. Remove in the order indicated in the table.
2. Install in the reverse order of removal.
3. Inspect the wheel alignment and adjust it if necessary. (See 02–11–2 FRONT WHEEL ALIGNMENT.)

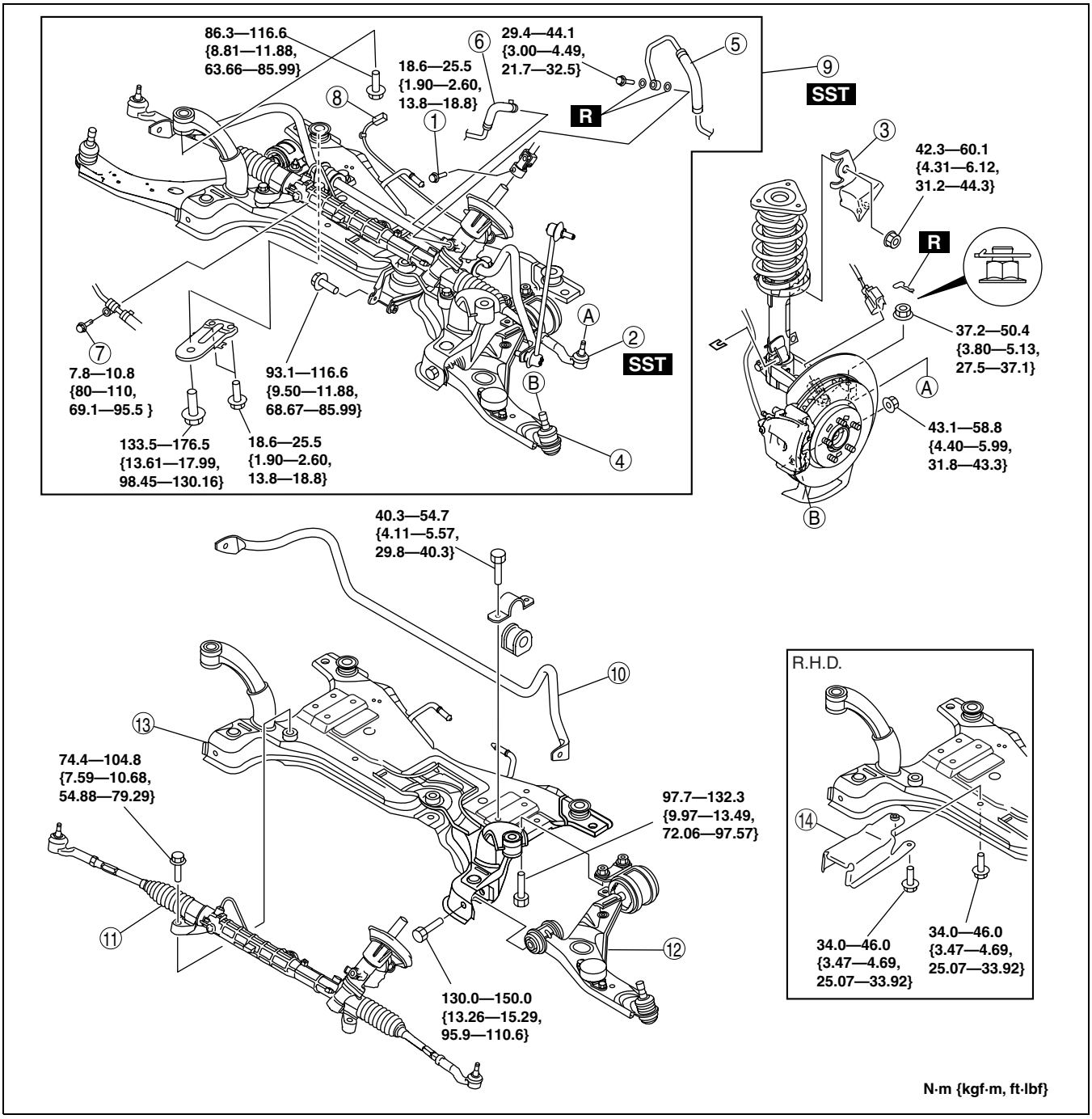

DPE213ZW1010

1	Bolt (intermediate shaft)
2	Tie-rod end ball joint (See 02–13–13 Tie-rod End Ball Joint Removal Note.)
3	Dynamic damper
4	Lower arm ball joint
5	Pressure pipe (gear side)
6	Return hose (gear side)
7	Bolt
8	P/S angle sensor connector (See 02–13–13 P/S Angle Sensor Connector Removal Note.)

9	Front crossmember component, steering gear and linkage component (See 02–13–13 Front Crossmember Component, Steering Gear and Linkage Component Removal Note.) (See 02–13–13 Front Crossmember Component, Steering Gear and Linkage Component Installation Note.)
10	Front stabilizer
11	Steering gear and linkage
12	Front lower arm
13	Front crossmember
14	Bracket

Tie-rod End Ball Joint Removal Note

1. Remove the tie-rod end locknut.
2. Detach the tie-rod end from the steering knuckle using the **SST**.

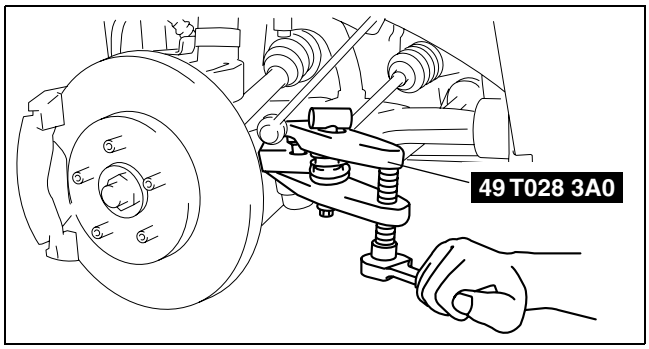

B3E0614W033

P/S Angle Sensor Connector Removal Note

1. Remove the coolant reserve tank. (See 01–12B–5 COOLANT RESERVE TANK REMOVAL/INSTALLATION [MZR-CD (RF Turbo)].)
2. Disconnect the P/S angle sensor connector.

Front Crossmember Component, Steering Gear and Linkage Component Removal Note

1. Remove the front crossmember, front stabilizer, lower arm, and steering gear as a single unit using a transmission jack.

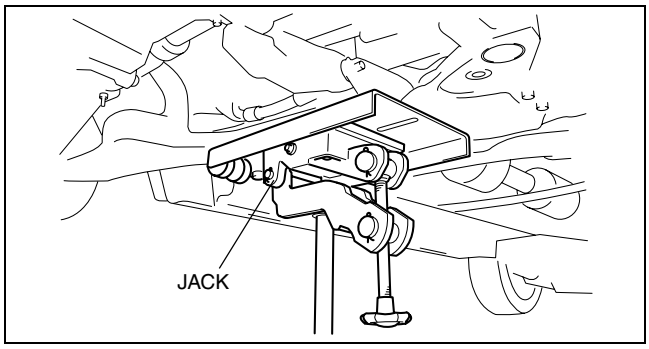

B3E0614W031

Front Crossmember Component, Steering Gear and Linkage Component Installation Note

1. Verify the left and right identification marks and install the positioning **SST** to the front crossmember.

   Note
   - Verify the identification marks before installation because the left and right parts of the **SST** have different shapes.

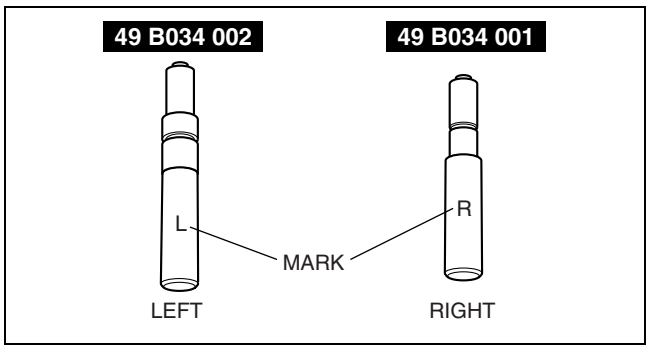

D3U213ZW6999

2. Support the front crossmember, front stabilizer, lower arm, and steering gear and linkage using a transmission jack.
3. Raise the transmission jack gradually and install the front crossmember to the vehicle. At this point verify that the **SST** is securely inserted in the positioning holes on the body.
4. Tighten the front crossmember installation bolts and nuts.

Note

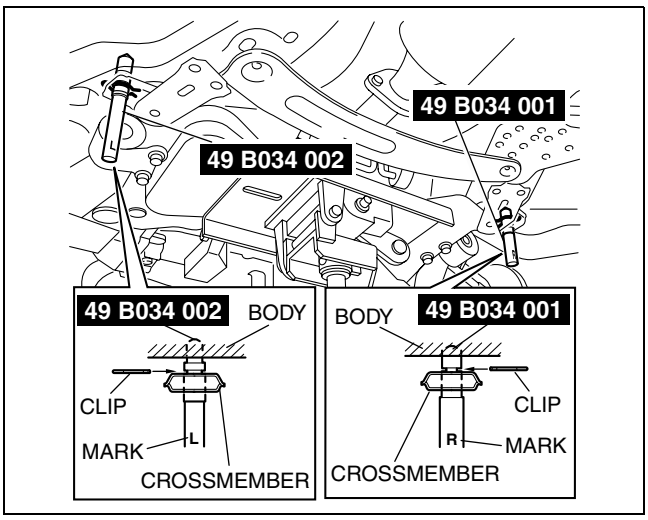

D3U213ZW6998

- When installing the No.1 engine mount, tighten the bolts in order shown in the figure to prevent abnormal noise and vibration after assembly.

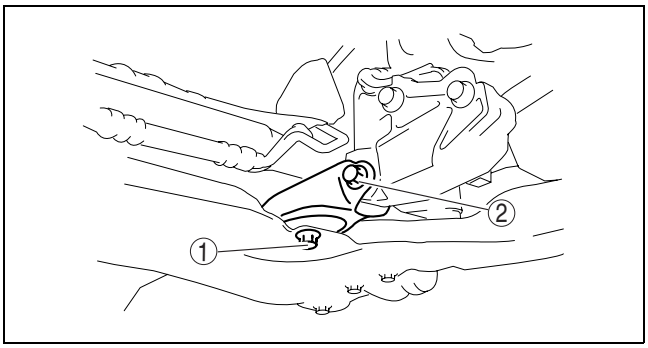

C3E515AW3001

02–14 REAR SUSPENSION

REAR SUSPENSION LOCATION INDEX 02–14–1
REAR SHOCK ABSORBER REMOVAL/ INSTALLATION 02–14–2
REAR SHOCK ABSORBER INSPECTION 02–14–3
REAR SHOCK ABSORBER DISPOSAL. 02–14–3
REAR COIL SPRING REMOVAL/ INSTALLATION 02–14–3
REAR LOWER ARM REMOVAL/ INSTALLATION 02–14–4
REAR UPPER ARM REMOVAL/ INSTALLATION. 02–14–5
REAR LATERAL LINK REMOVAL/ INSTALLATION. 02–14–7
REAR STABILIZER REMOVAL/ INSTALLATION. 02–14–8
REAR STABILIZER CONTROL LINK INSPECTION 02–14–9
REAR TRAILING LINK REMOVAL/ INSTALLATION. 02–14–9
REAR CROSSMEMBER REMOVAL/ INSTALLATION. 02–14–11

REAR SUSPENSION LOCATION INDEX

DPE021400000W01

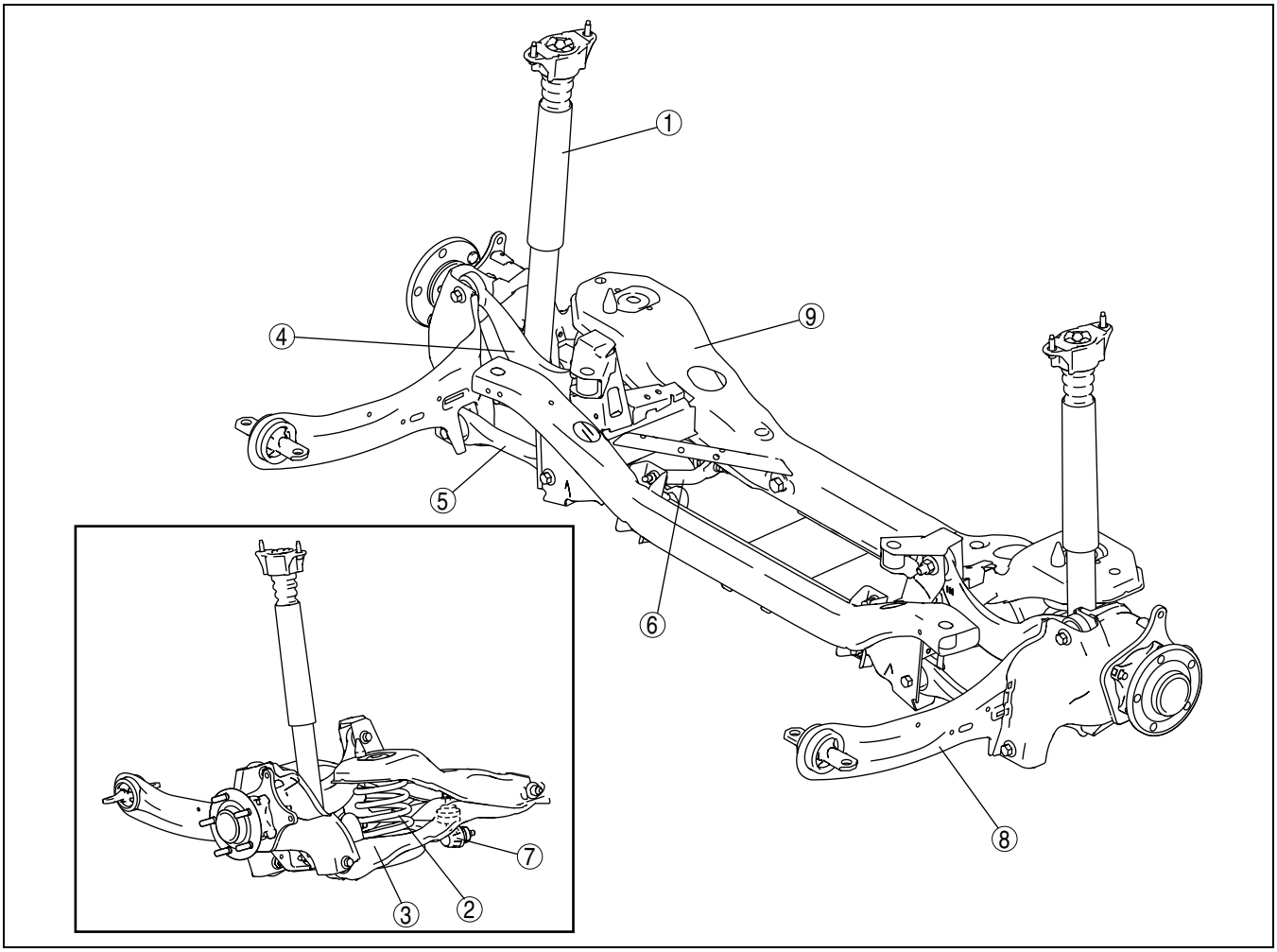

DPE214ZW1009

1	Rear shock absorber (See 02–14–2 REAR SHOCK ABSORBER REMOVAL/INSTALLATION.) (See 02–14–3 REAR SHOCK ABSORBER INSPECTION.) (See 02–14–3 REAR SHOCK ABSORBER DISPOSAL.)
2	Rear coil spring (See 02–14–3 REAR COIL SPRING REMOVAL/ INSTALLATION.)
3	Rear lower arm (See 02–14–4 REAR LOWER ARM REMOVAL/ INSTALLATION.)
4	Rear upper arm (See 02–14–5 REAR UPPER ARM REMOVAL/ INSTALLATION.)
5	Rear lateral link (See 02–14–7 REAR LATERAL LINK REMOVAL/ INSTALLATION.)

6	Rear stabilizer (See 02–14–8 REAR STABILIZER REMOVAL/ INSTALLATION.)
7	Stabilizer control link (See 02–14–8 REAR STABILIZER REMOVAL/ INSTALLATION.)
8	Rear trailing link (See 02–14–9 REAR TRAILING LINK REMOVAL/ INSTALLATION.)
9	Rear crossmember (See 02–14–11 REAR CROSSMEMBER REMOVAL/INSTALLATION.)

REAR SHOCK ABSORBER REMOVAL/INSTALLATION

DPE021428700W01

1. Remove in the order indicated in the table.

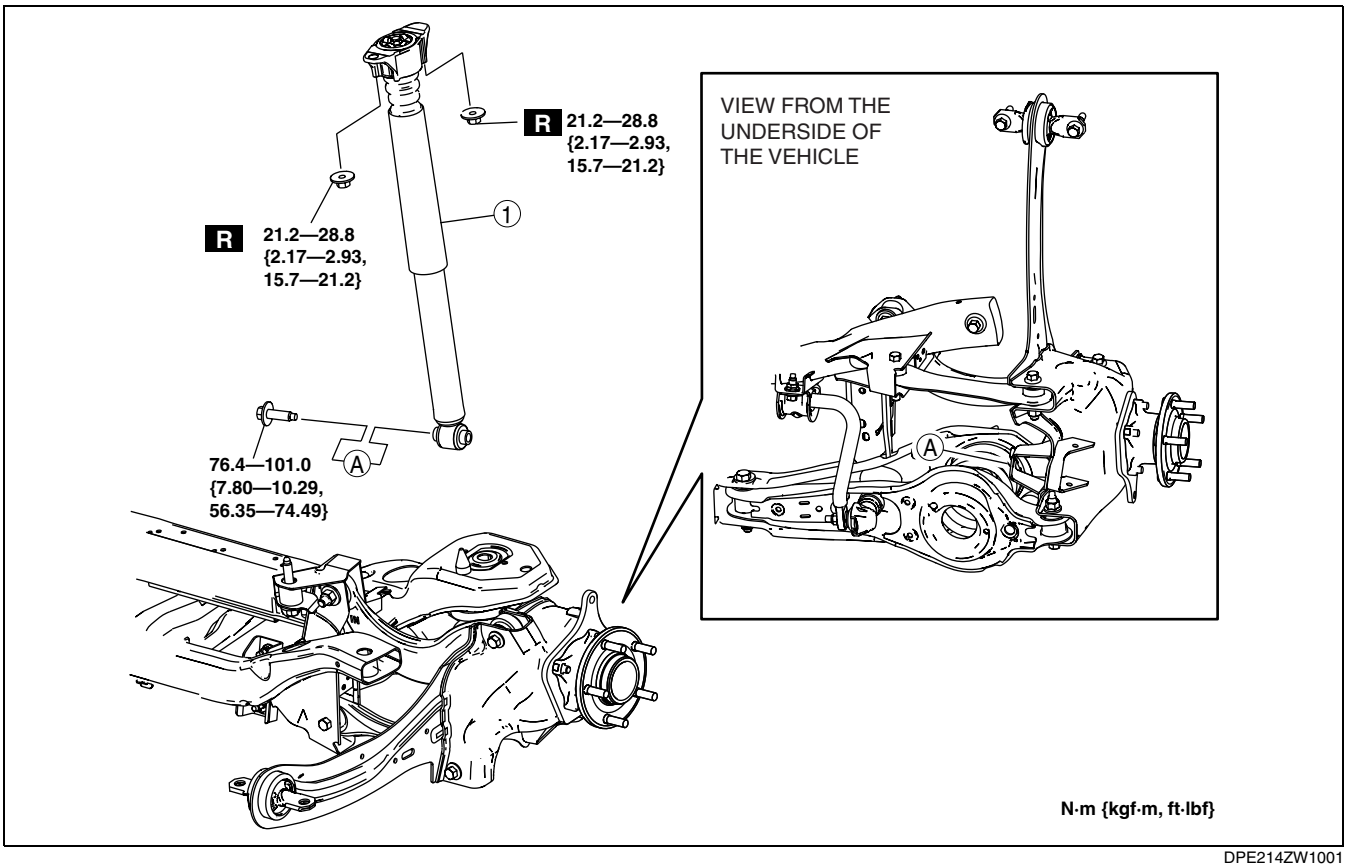

DPE214ZW1001

1	Rear shock absorber (See 02–14–3 Rear Shock Absorber Removal Note.)

2. Install in the reverse order of removal.

Rear Shock Absorber Removal Note

1. Support the rear axle using a jack.
2. Remove the rear shock absorber.

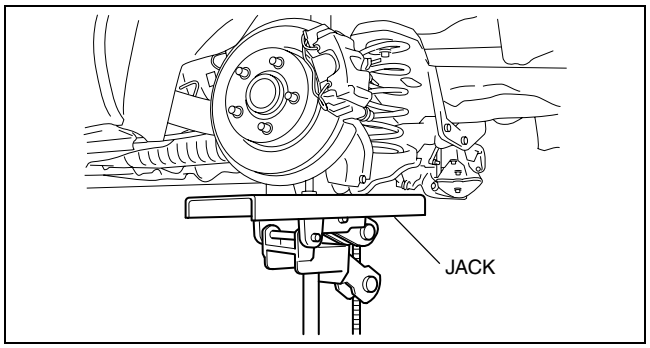

B3E0214W003

REAR SHOCK ABSORBER INSPECTION

DPE021428700W02

1. Inspect in the same way as the front shock absorber.
   (See 02–13–6 FRONT SHOCK ABSORBER INSPECTION.)

REAR SHOCK ABSORBER DISPOSAL

DPE021428700W03

1. Dispose of the rear shock absorber in the same way as the front shock absorber.
   (See 02–13–6 FRONT SHOCK ABSORBER DISPOSAL.)

REAR COIL SPRING REMOVAL/INSTALLATION

DPE021428110W01

1. Remove the rear auto leveling sensor. (See 09–18–14 AUTO LEVELING SENSOR REMOVAL/ INSTALLATION.)
2. Remove the rear stabilizer. (See 02–14–8 REAR STABILIZER REMOVAL/INSTALLATION.)
3. Remove in the order indicated in the table.
4. Install in the reverse order of removal.
5. Inspect the wheel alignment and adjust it if necessary.
   (See 02–11–3 REAR WHEEL ALIGNMENT.)

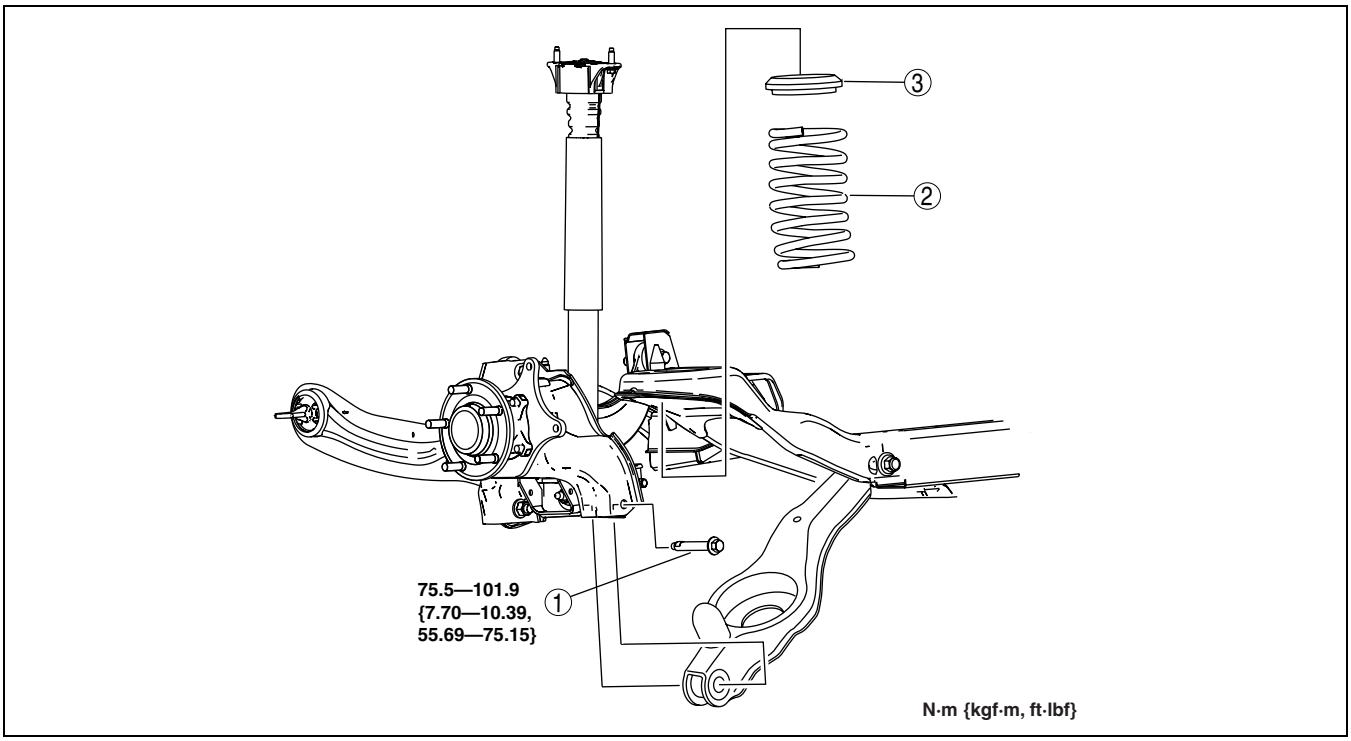

B3E0214W004

1	Rear lower arm outer bolt (See 02–14–4 Rear Lower Arm Outer Bolt Removal Note.)

2	Rear coil spring (See 02–14–4 Rear Coil Spring Installation Note.)
3	Upper spring seat rubber

Rear Lower Arm Outer Bolt Removal Note

1. Support the rear lower arm using a jack.
2. Loosen the rear lower arm inner bolt.
3. Remove the rear lower arm outer bolt.

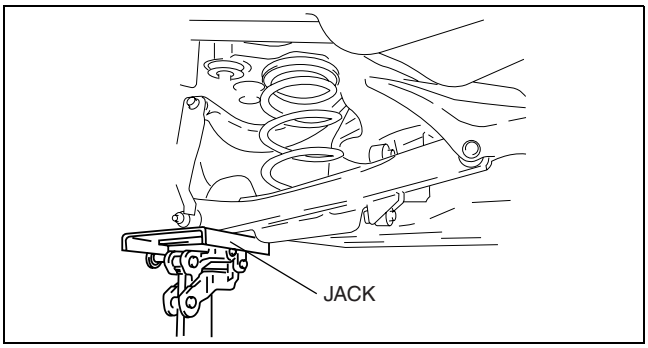

B3E0214W005

Rear Coil Spring Installation Note

1. Position the jack under the rear lower arm and jack up slowly.

   Warning
   - **Installing the coil spring is dangerous. The coil spring could fly off and cause serious injure or death, and damage the vehicle.**

2. Align the upper end of the rear coil spring with the step of the upper spring seat rubber.
3. Align the lower end of the rear coil spring with the step of the lower spring seat rubber.
4. Install the lower arm outer bolt.

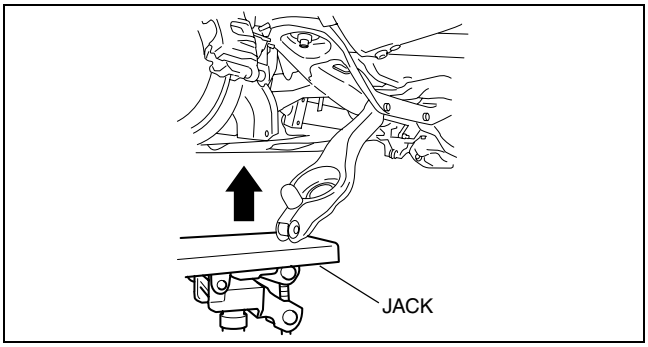

B3E0214W010

REAR LOWER ARM REMOVAL/INSTALLATION

DPE021428310W01

1. Remove in the order indicated in the table.
2. Install in the reverse order of removal.
3. Inspect the wheel alignment and adjust it if necessary. (See 02–11–3 REAR WHEEL ALIGNMENT.)

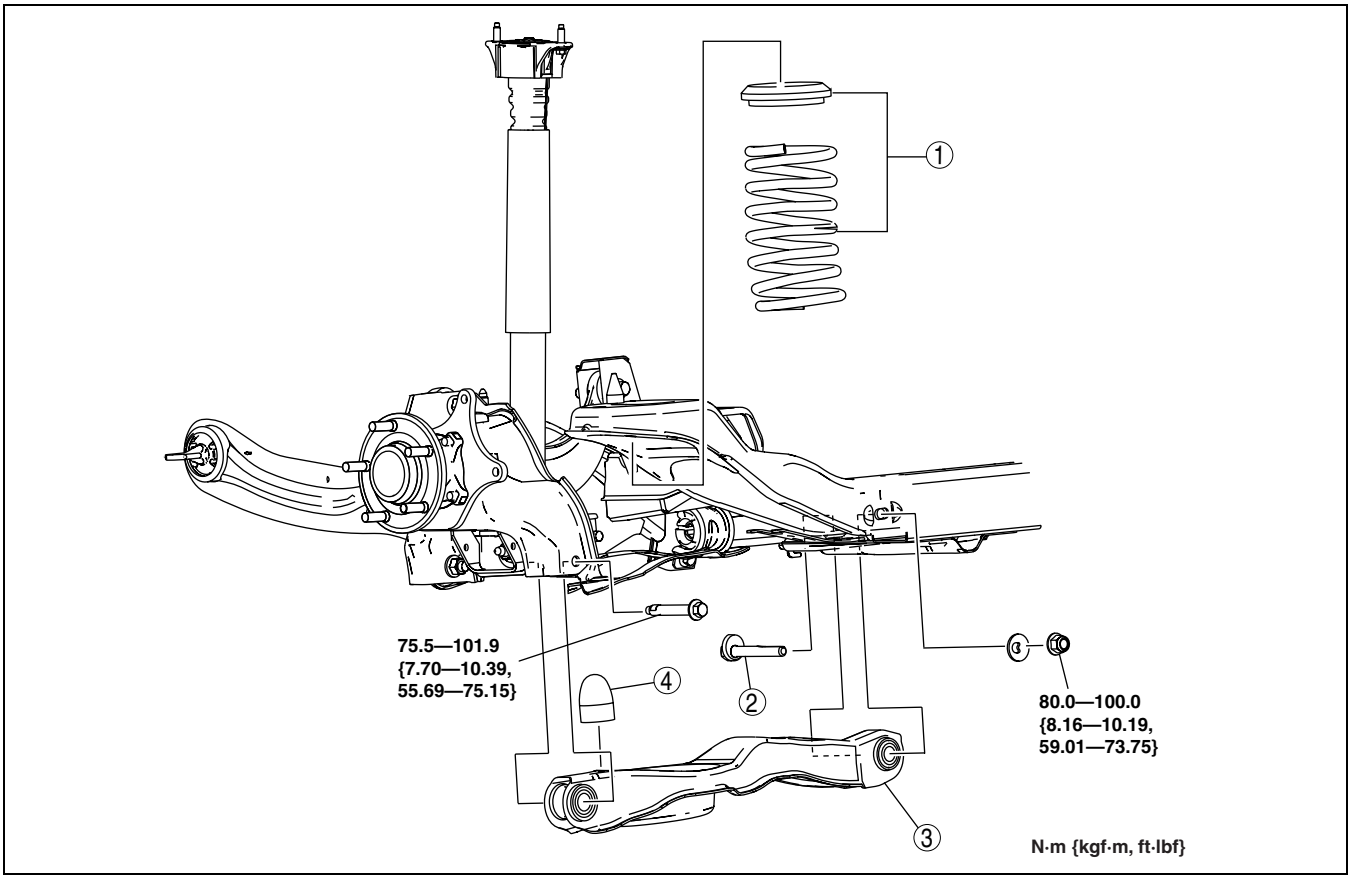

B3E0214W007

1	Rear coil spring component (See 02–14–3 REAR COIL SPRING REMOVAL/ INSTALLATION.)

2	Rear lower arm inner bolt
3	Rear lower arm
4	Bound stopper

REAR UPPER ARM REMOVAL/INSTALLATION

DPE021428210W01

1. Remove the rear auto leveling sensor. (See 09–18–14 AUTO LEVELING SENSOR REMOVAL/ INSTALLATION.)
2. Remove in the order indicated in the table.
3. Install in the reverse order of removal.
4. Inspect the wheel alignment and adjust it if necessary. (See 02–11–3 REAR WHEEL ALIGNMENT.)

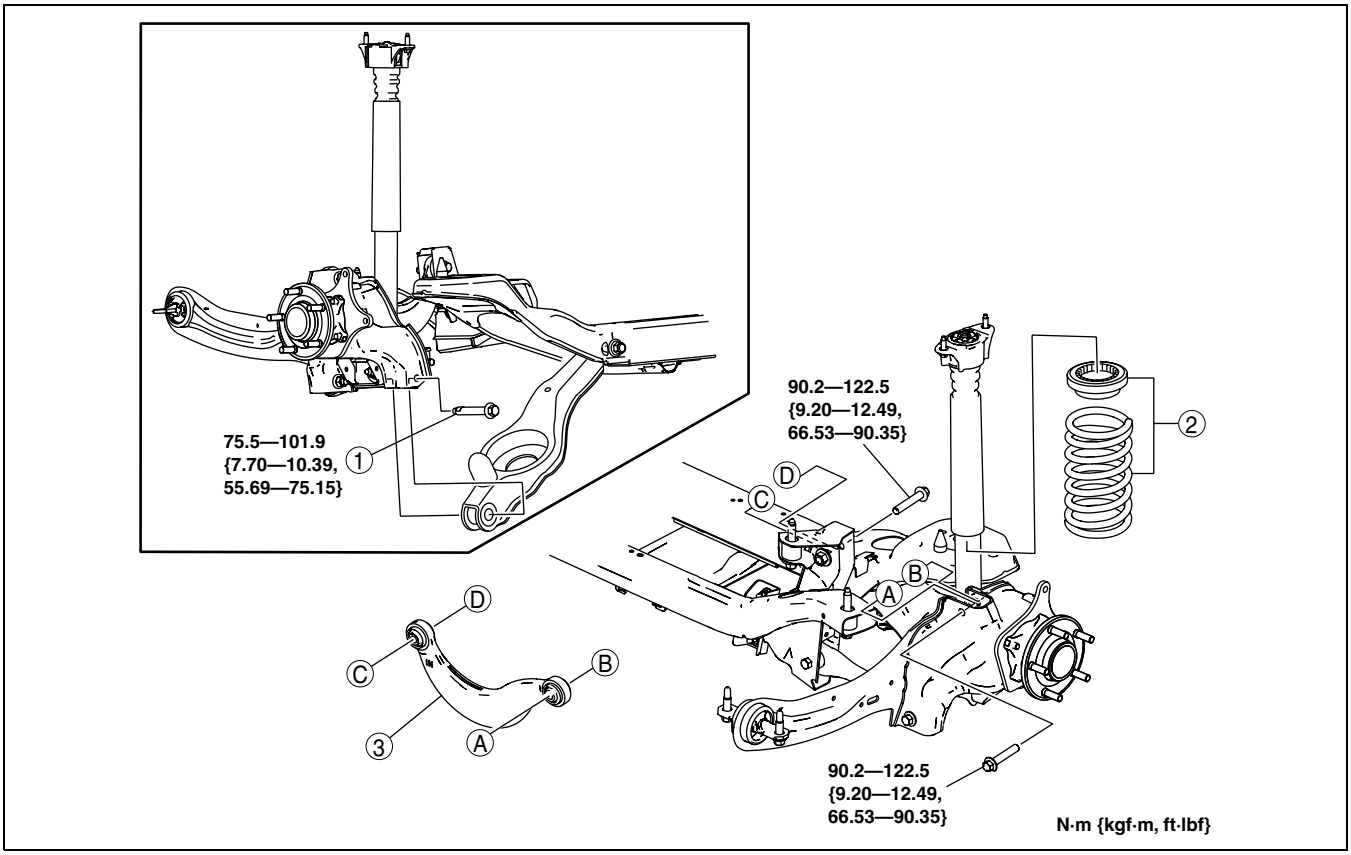

DPE214ZW1008

1	Rear lower arm outer bolt (See 02–14–6 Rear Lower Arm Outer Bolt Removal Note.)

2	Rear coil spring component (See 02–14–3 REAR COIL SPRING REMOVAL/ INSTALLATION.)
3	Rear upper arm (See 02–14–7 Rear Upper Arm Installation Note.)

Rear Lower Arm Outer Bolt Removal Note

1. Support the rear lower arm using a jack.
2. Loosen the rear lower arm inner bolt.
3. Remove the rear lower arm outer bolt.

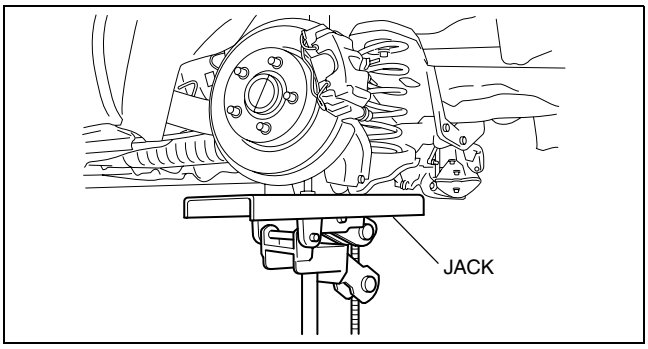

B3E0214W003

Rear Upper Arm Installation Note

1. Install the rear upper arm so that IN mark is facing toward the inside of the vehicle.

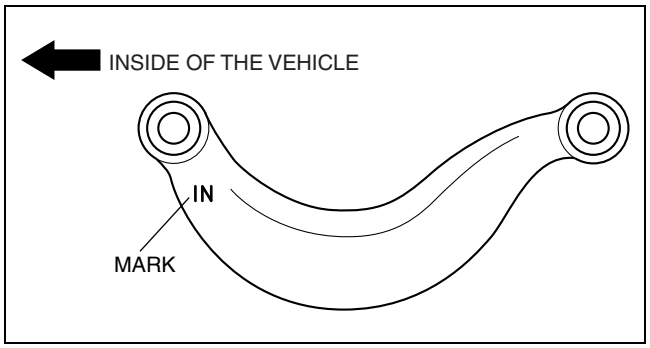

DPE214ZW1010

REAR LATERAL LINK REMOVAL/INSTALLATION

DPE021428600W01

1. Remove the rear auto leveling sensor. (See 09–18–14 AUTO LEVELING SENSOR REMOVAL/INSTALLATION.)
2. Remove the rear stabilizer. (See 02–14–8 REAR STABILIZER REMOVAL/INSTALLATION.)
3. Remove in the order indicated in the table.
4. Install in the reverse order of removal.
5. Inspect the wheel alignment and adjust it if necessary. (See 02–11–3 REAR WHEEL ALIGNMENT.)

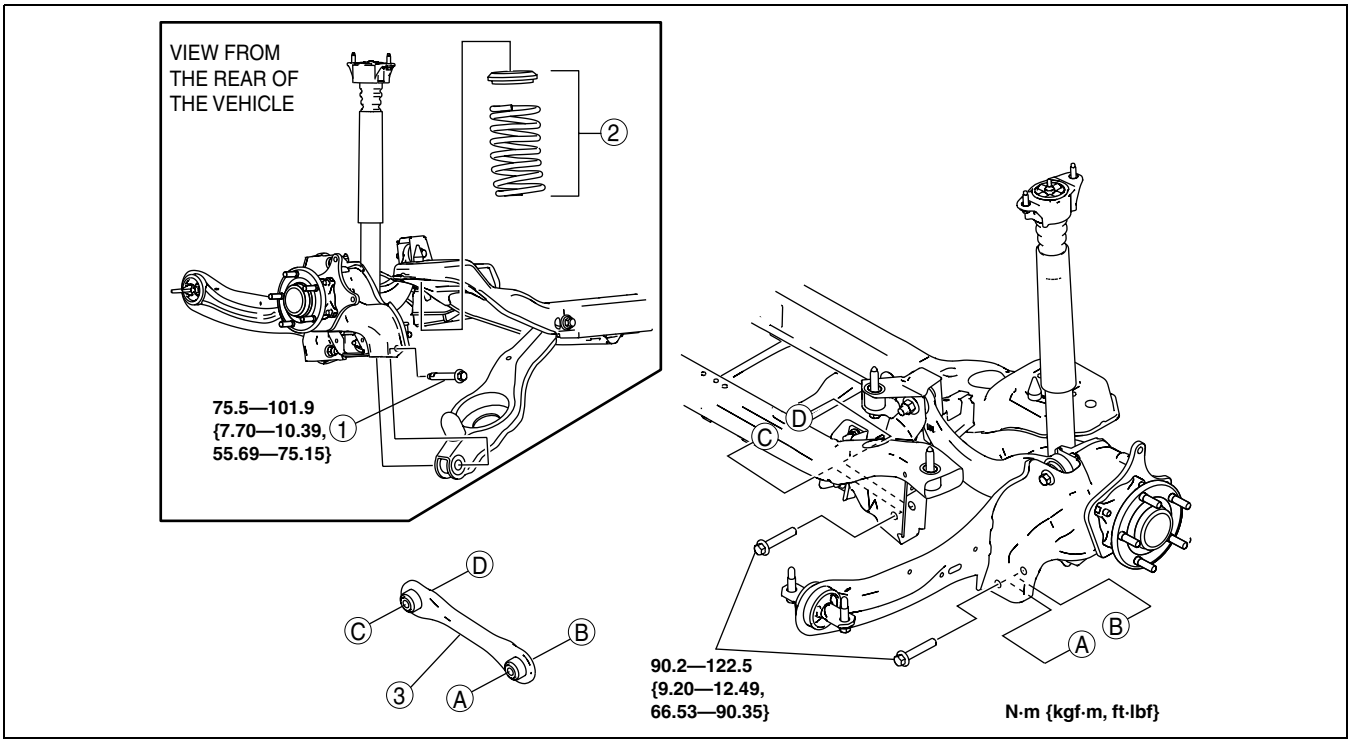

DPE214ZW1002

1	Rear lower arm outer bolt (See 02–14–8 Rear Lower Arm Outer Bolt Removal Note.)

2	Rear coil spring component (See 02–14–3 REAR COIL SPRING REMOVAL/INSTALLATION.)
3	Rear lateral link (See 02–14–8 Rear Lateral Link Installation Note.)

Rear Lower Arm Outer Bolt Removal Note

1. Support the rear lower arm using a jack.
2. Loosen the rear lower arm inner bolt.
3. Remove the rear lower arm outer bolt.

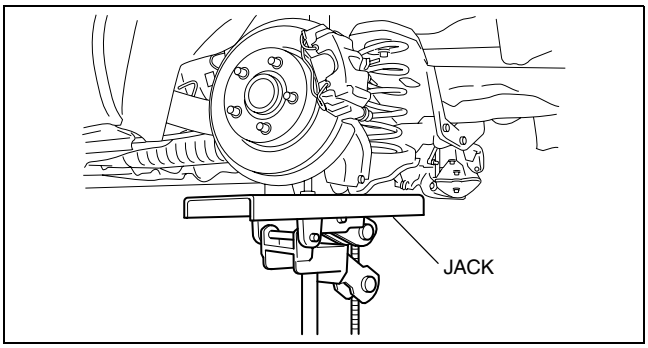

B3E0214W003

Rear Lateral Link Installation Note

1. Install the rear lateral link with “FRONT” facing the vehicle front and the painted mark facing the inside of the vehicle.

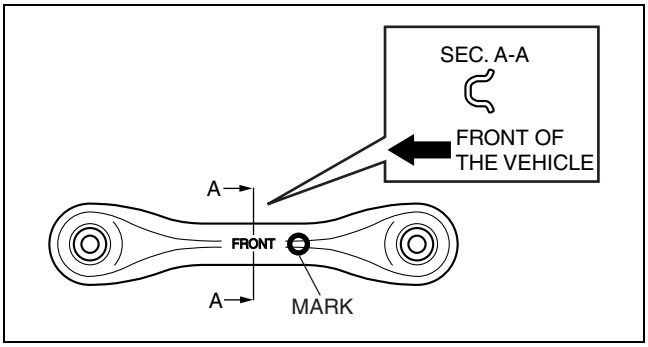

DPE214ZW1007

REAR STABILIZER REMOVAL/INSTALLATION

DPE021428100W01

1. Remove in the order indicated in the table.
2. Install in the reverse order of removal.

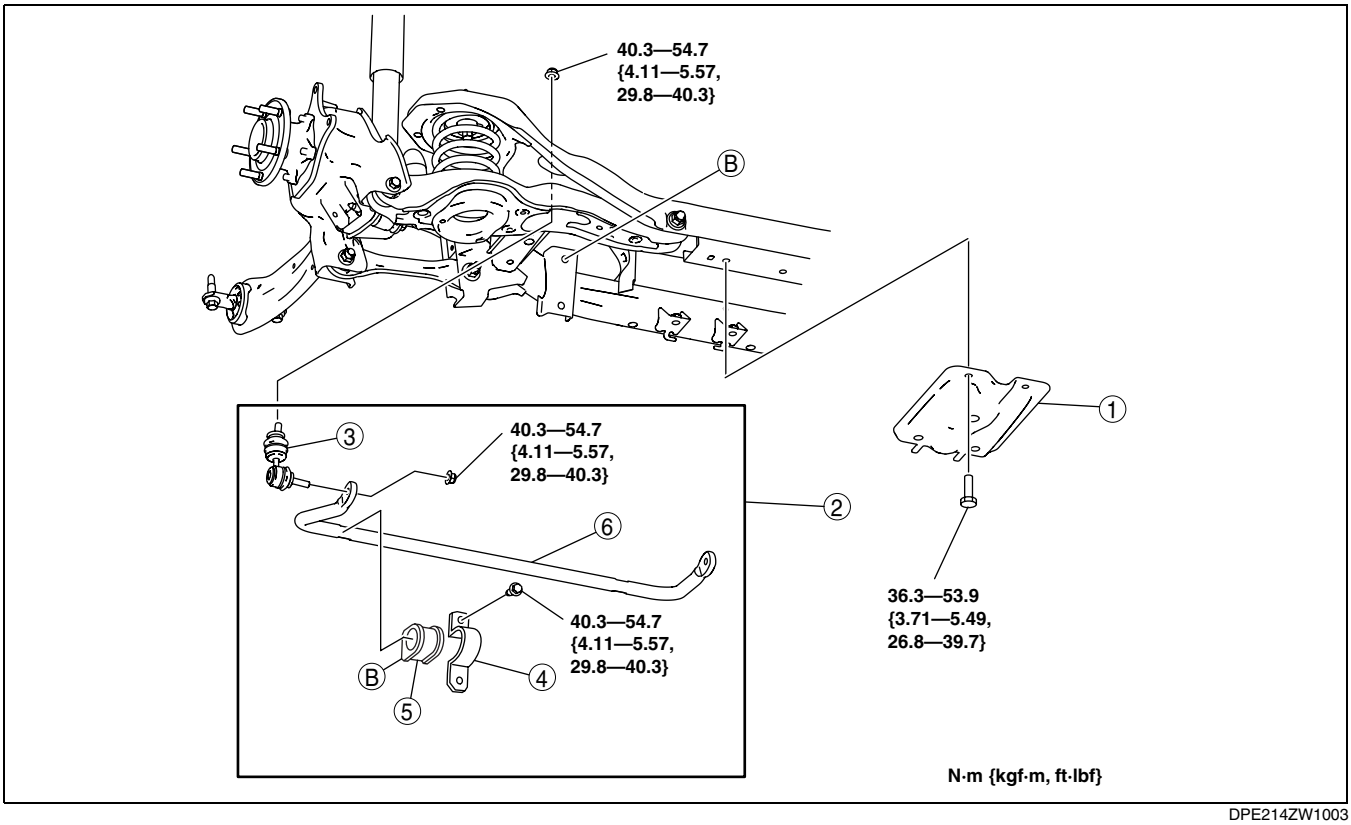

DPE214ZW1003

1	Rear crossmember bracket

2	Rear stabilizer component (See 02–14–9 Rear Stabilizer Component Installation Note.)

3	Stabilizer control link
4	Stabilizer bracket (See 02–14–9 Stabilizer Bracket Installation Note.)
5	Stabilizer bushing
6	Rear stabilizer

Stabilizer Bracket Installation Note

1. Verify the installation direction of the stabilizer bracket (the arrow should point up) by placing the stabilizer bar so that the identification mark faces the right side of the vehicle.
2. Install the stabilizer bush bracket at the position shown in the figure.

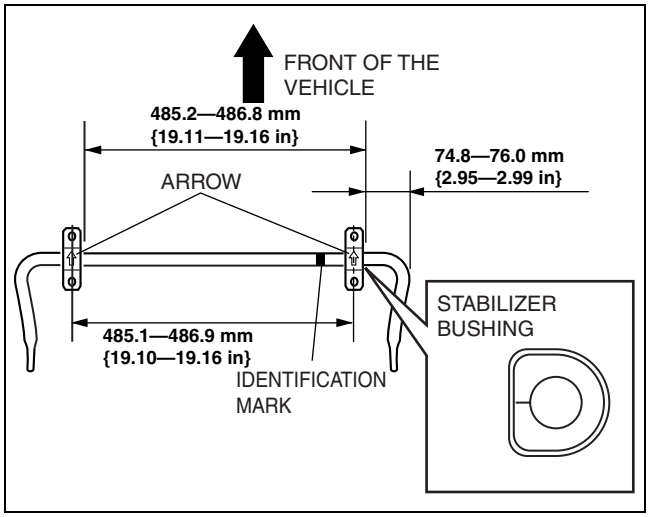

DPE214ZW1004

Rear Stabilizer Component Installation Note

1. With the arrow on the stabilizer bracket facing the vehicle front, tighten the bolts in the order shown in the figure.

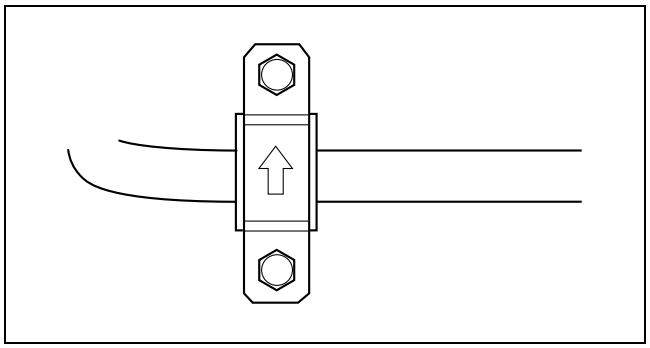

DPE213ZW1009

REAR STABILIZER CONTROL LINK INSPECTION

DPE021434150W01

1. Remove the stabilizer control link from the vehicle.
2. Inspect for bending or damage. If there is any malfunction, replace the stabilizer control link.
3. Rotate the ball joint stud **10 times** and shake it side to side **10 times**.
4. Measure the ball-joint rotational torque using an Allen wrench and a torque wrench.

   Rear stabilizer control link ball joint rotational torque
   0.5—2.0 N·m {6—20 kgf·cm, 5—17 in·lbf}

   - If not within the specification, replace the stabilizer control link.

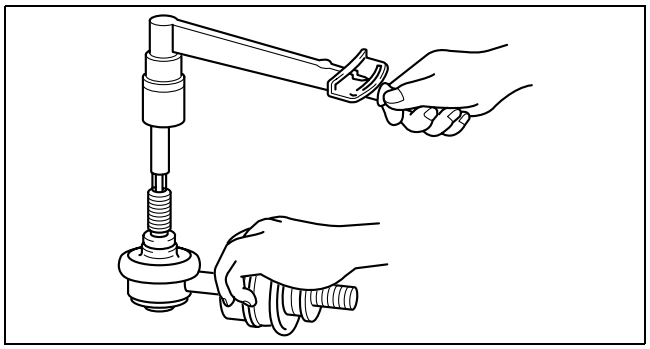

B3E0214W022

REAR TRAILING LINK REMOVAL/INSTALLATION

DPE021428200W01

Caution

- **Performing the following procedures without first removing the ABS wheel-speed sensor may**

possibly cause an open circuit in the wiring harness if it is pulled by mistake. Before performing the following procedures, disconnect the ABS wheel-speed sensor wiring harness connector (axle side) and fix the wiring harness to an appropriate place where it will not be pulled by mistake while servicing the vehicle.

1. Remove in the order indicated in the table.
2. Install in the reverse order of removal.
3. Inspect the wheel alignment and adjust it if necessary.
   (See 02–11–3 REAR WHEEL ALIGNMENT.)

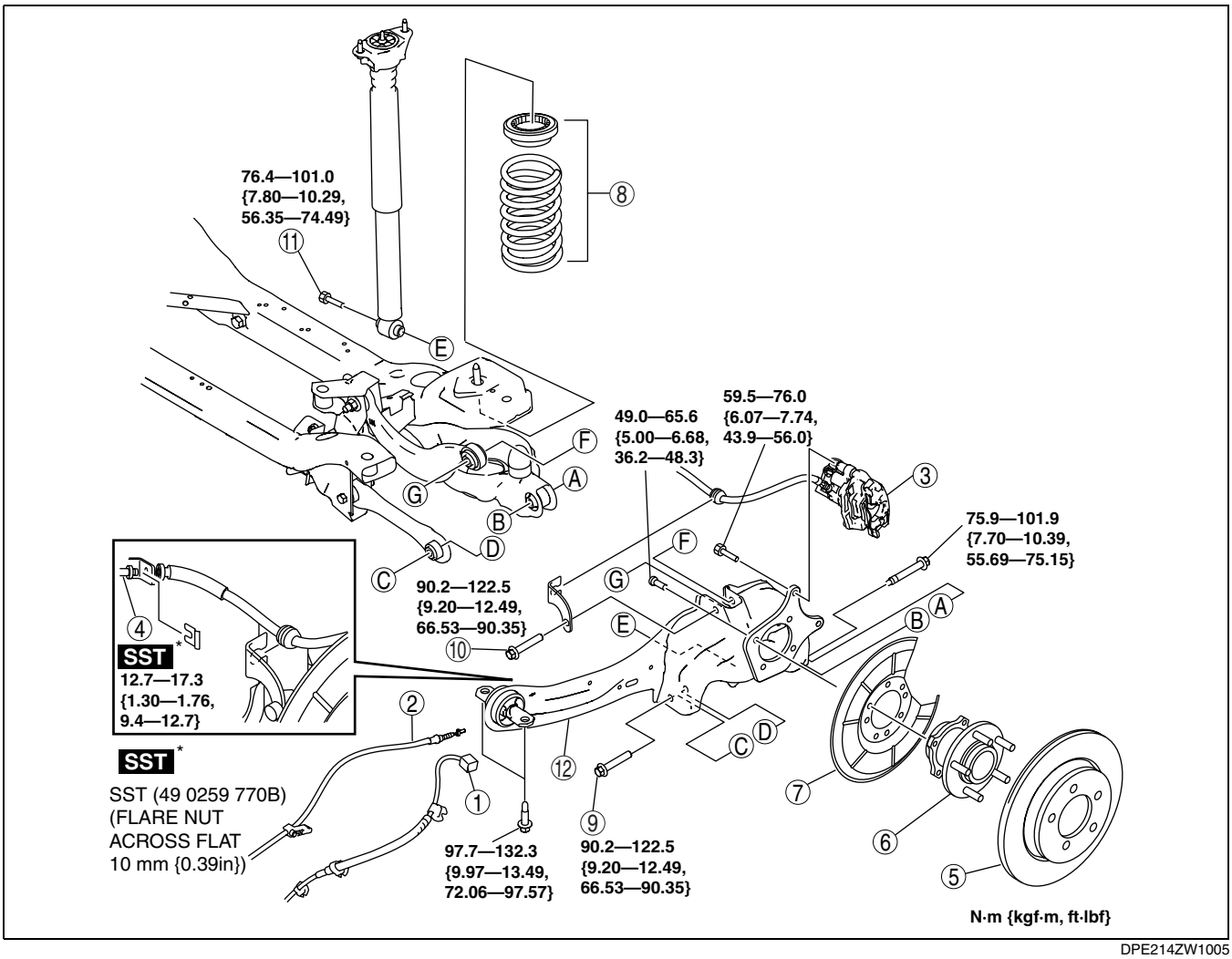

DPE214ZW1005

1	ABS wheel-speed sensor wiring harness connector
2	Parking brake cable
3	Brake caliper component (See 02–14–10 Brake Caliper Component Removal Note.)
4	Brake pipe
5	Disc plate
6	Rear hub component
7	Dust cover

8	Rear coil spring component (See 02–14–3 REAR COIL SPRING REMOVAL/ INSTALLATION.)
9	Rear lateral link outer bolt (See 02–14–11 Rear Lateral Link Outer Bolt Removal Note.)
10	Rear upper arm outer bolt
11	Rear shock absorber lower bolt
12	Rear trailing link (See 02–14–11 Rear Trailing Link Installation Note.)

Brake Caliper Component Removal Note

1. Hang the caliper component using a cable and move aside.

Rear Lateral Link Outer Bolt Removal Note

1. Support the trailing link using a jack.

   Caution
   - **Verify that the trailing link is securely supported by a jack. If the trailing link falls off, it can cause serious injury or death, and damage to the vehicle.**

2. Remove the rear lateral link outer bolt.

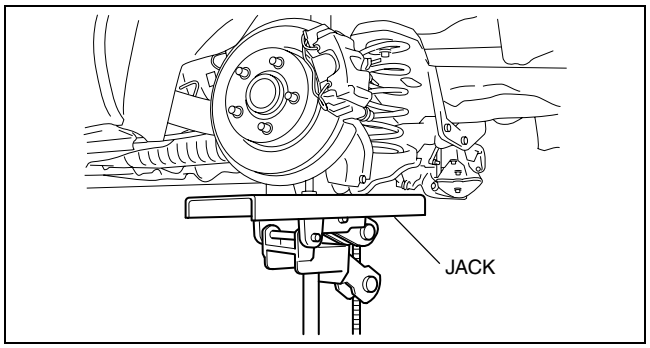

B3E0214W003

Rear Trailing Link Installation Note

1. Support the trailing link using a jack.
2. Tighten the trailing link front side bolts.

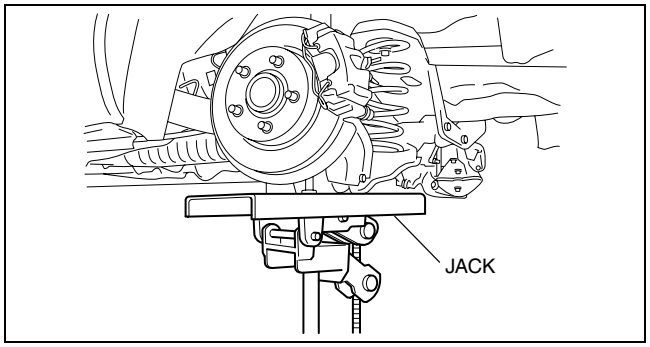

B3E0214W003

REAR CROSSMEMBER REMOVAL/INSTALLATION

DPE021428400W01

Caution
- **Performing the following procedures without first removing the ABS wheel-speed sensor may possibly cause an open circuit in the wiring harness if it is pulled by mistake. Before performing the following procedures, disconnect the ABS wheel-speed sensor wiring harness connector (axle side) and fix the wiring harness to an appropriate place where it will not be pulled by mistake while servicing the vehicle.**

1. Remove the rear auto leveling sensor.
   (See 09–18–14 AUTO LEVELING SENSOR REMOVAL/INSTALLATION.)
2. Remove the rear stabilizer.
   (See 02–14–8 REAR STABILIZER REMOVAL/INSTALLATION.)
3. Remove the charcoal canister.
   (See 01–16A–7 CHARCOAL CANISTER REMOVAL/INSTALLATION [L8, LF].)
4. Remove in the order indicated in the table.
5. Install in the reverse order of removal.
6. Inspect the wheel alignment and adjust it if necessary.
   (See 02–11–3 REAR WHEEL ALIGNMENT.)

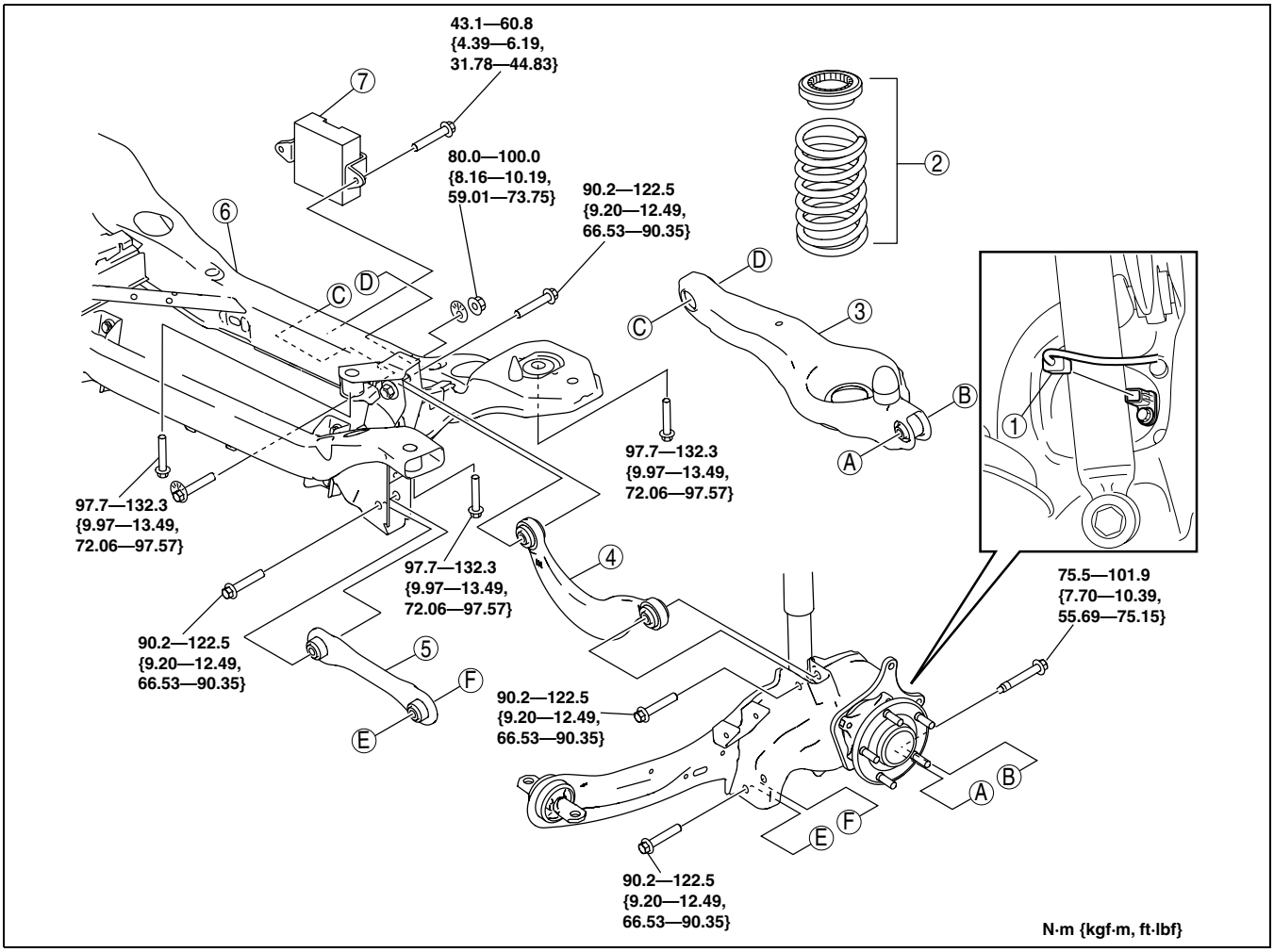

DPE214ZW1006

1	ABS wheel-speed sensor wiring harness connector
2	Rear coil spring (See 02–14–3 REAR COIL SPRING REMOVAL/ INSTALLATION.)
3	Rear lower arm (See 02–14–4 REAR LOWER ARM REMOVAL/ INSTALLATION.)
4	Rear upper arm (See 02–14–5 REAR UPPER ARM REMOVAL/ INSTALLATION.)

5	Rear lateral link (See 02–14–7 REAR LATERAL LINK REMOVAL/ INSTALLATION.)
6	Rear crossmember (See 02–14–12 Rear Crossmember Removal Note.)
7	Dynamic damper

Rear Crossmember Removal Note

Warning

- **Verify that the crossmember is securely supported by a jack. If the rear crossmember falls off, it can cause serious injury or death, and damage to the vehicle.**

1. Support the rear crossmember with the jack and remove the bolt.
2. Remove the rear crossmember.

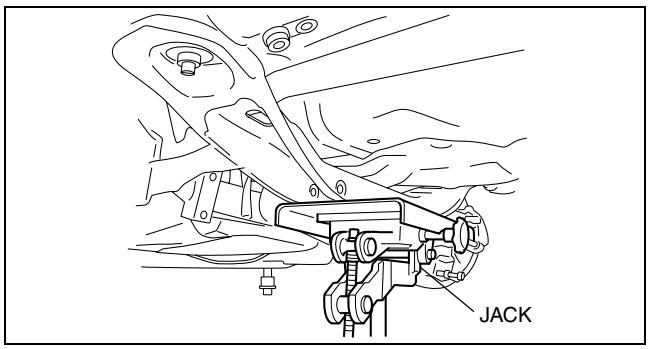

B3E0214W021

02–50 TECHNICAL DATA

SUSPENSION TECHNICAL DATA 02–50–1

SUSPENSION TECHNICAL DATA

DPE025000000W01

Front wheel alignment (Unloaded)*1 [L8, LF engine]

Item			Fuel gauge indication				
			Empty	1/4	1/2	3/4	Full
Maximum steering angle [Tolerance ±3°]		Inner	40 °30′±3°				
		Outer	33 °48′±3°				
Total toe-in	Tire [Tolerance ±4 {±0.16}]	(mm {in})	2 {0.08}				
	Rim inner		1±3 {0.04±0.12}				
		(degree)	0°11′±0°22′				
Caster angle*2 (Reference value) [Tolerance ±1°]			3°08′	3°09′	3°11′	3°13′	3°14′
Camber angle*2 (Reference value) [Tolerance ±1°]			–0°41′			–0°42′	
Steering axis inclination (Reference value)			13°57′			13°59′	

Front wheel alignment (Unloaded)*1 [MZR-CD (RF Turbo) engine]

Item			Fuel gauge indication				
			Empty	1/4	1/2	3/4	Full
Maximum steering angle [Tolerance ±3°]		Inner	40 °30′±3°				
		Outer	33 °48′±3°				
Total toe-in	Tire [Tolerance ±4 {±0.16}]	(mm {in})	2 {0.08}				
	Rim inner		1±3 {0.04±0.12}				
		(degree)	0°11′±0°22′				
Caster angle*2 (Reference value) [Tolerance ±1°]			3°05′	3°07′	3°08′	3°10′	3°12′
Camber angle*2 (Reference value) [Tolerance ±1°]			–0°42′	–0°43′			–0°44′
Steering axis inclination (Reference value)			14°01′	14°02′			14°04

*1 : Engine coolant and engine oil are at specified level. Spare tire, jack and tools are in designated position.
*2 : Difference between left and right must not exceed **1°30′** .

Rear wheel alignment (Unload)*1 [L8, LF engine]

Item			Fuel gauge indication				
			Empty	1/4	1/2	3/4	Full
Total toe-in	Tire [Tolerance ±4 {±0.16}]	(mm {in})	2 {0.08}				
	Rim inner		1±3 {0.04±0.12}				
		(degree)	0°11′±0°22′				
Camber angle*2 (Reference value) [Tolerance ±1°]			−1°22′	−1°24′	−1°26′	−1°27′	−1°29′
Thrust angle (Reference value) [Tolerance ±0°48′]			0°				

Rear wheel alignment (Unloaded)*1 [MZR-CD (RF Turbo) engine]

Item			Fuel gauge indication				
			Empty	1/4	1/2	3/4	Full
Total toe-in	Tire [Tolerance ±4 {±0.16}]	(mm {in})	2 {0.08}				
	Rim inner		1±3 {0.04±0.12}				
		(degree)	0°11′±0°22′				
Camber angle*2 (Reference value) [Tolerance ±1°]			−1°21′	−1°24′	−1°25′	−1°27′	−1°29′
Thrust angle (Reference value) [Tolerance ±0°48′]			0°				

*1 : Engine coolant and engine oil are at specified level. Spare tire, jack and tools are in designated position.
*2 : Difference between left and right must not exceed **1°30′** .

Wheel and tires

Item				Specification			
Standard tire and wheel							
Wheel	Size			15 × 6J		16 × 6 1/2J	17 × 6 1/2J
	Offset		(mm {in})	52.5 {2.07}			
	Pitch circle diameter		(mm {in})	114.3 {4.50}			
	Material			Steel	Aluminum alloy	Aluminum alloy	
Tire	Size			195/65R15 91V		205/55R16 91V	205/50R17 93V
	Air pressure (kPa {kgf/cm^2, psi})	Front	Up to 3 persons	220 {2.2, 32}			MZR-CD (RF Turbo): 230 {2.3, 33} Except for above: 220 {2.2, 32}
			Full load	240 {2.4, 35}			
		Rear	Up to 3 persons	220 {2.2, 32}			MZR-CD (RF Turbo): 230 {2.3, 33} Except for above: 220 {2.2, 32}
			Full load	280 {2.8, 41}			
	Remaining tread		(mm {in})	1.6 {0.06}			
Wheel and tire	Lug nut tightening torque		(N·m {kgf·m, ft·lbf})	88.2—117.6 {9.0—12.0, 65.0—87.0}			
	Wheel and tire runout (mm {in})	Radial direction		1.5 {0.06} max.			
		Lateral direction		2.5 {0.10} max.	2.0 {0.08} max.		
	Wheel imbalance		(g {oz})	Knock-type*2: 9 {0.32} max.	Adhesive-type*1: 14 {0.49} max. Knock-type*2: 9 {0.32} max.	Adhesive-type*1: 13 {0.46} max. Knock-type*2: 8 {0.28} max.	Adhesive-type*1: 11 {0.38} max. Knock-type*2: 7 {0.25} max.

*1 : Total weight exceeds **160 g {5.65 oz}** .
*2 : One balance weight: **60 g {2.12 oz}** max. If the total weight exceeds **100 g {3.53 oz}** on one side, rebalance

after moving the tire around on the rim. Do not use three or more balance weights.

Item	Specification
Front lower arm rotational torque	1.0—4.9 N·m {11—49 kgf·cm, 9—43 in·lbf} Pull scale reading [10—49 N {1.1—4.9 kgf, 3—10 lbf}]
Front stabilizer control link ball joint rotational torque	0.2—0.9 N·m {3—9 kgf·cm, 2—7 in·lbf}
Rear stabilizer control link ball joint rotational torque	0.5—2.0 N·m {6—20 kgf·cm, 5—17 in·lbf}

02–60 SERVICE TOOLS

SUSPENSION SST 02–60–1

SUSPENSION SST

DPE026000000W01

49 T034 1A0 Coil spring compressor set	49 0180 510B Preload measuring attachment	49 8038 785A Dust boot installer
49 T028 3A0 Ball Joint Puller set	49 B034 001 Guide	49 B034 002 Guide
49 0259 770B Flare Nut Wrench	—	—